# MACHINE DOCUMENTATION

Type **COMPACT 235**
Serial number **B18325**
Year of construction **2016**

**Melvin Brewery**
624 Country Road 101
WY 83128 ALPINE
U.S.A.

- Achtung!

Lesen Sie unbedingt die Gebrauchsanweisung vor Aufstellung-Installation-Inbetriebnahme. Dadurch schützen Sie sich und vermeiden Schäden an Ihrem Apparat.

- Opgelet!

Leest U in elk geval de gebruiksaanwijzing, vooraleer de machine wordt opgesteld, geïnstalleerd en in gebruik genomen wordt. Daardoor zorgt U voor Uw eigen veiligheid en vermijdt U schade aan Uw machine.

- OBS!

De bør absolut læse bruganvisningen, inden maskinen opstilles, installeres og tages i brug. Derved beskytter De Dem selv og undgår skader på maskinen.

- Atencion!

Resulta imprescindible leer las Instrucciones de manejo antes de proceder al Emplazamiento/ Instalacion/Puesta en servicio del aparato, con objeto de protegerse a si mismo y evitar el deterioro de la máquina debido a un manejo incorrecto.

- Attention!

Lisez impérativement le mode d'emploi avant 1'installation/la mise en service.
Vous vous protègerez ainsi et éviterez des détériorations sur votre appareil.

- Important!

Read the operating instructions carefully before installation and before using this machine for the first time.
You will avoid the risk of causing harm to yourself or to your machine in this way.

- Attenzione!

Leggere assolutamente le instruzione d'uso prima di procedere a posizionatura – installatione - messa in funzione. In questo modo ci si protegge e si evitano danni all'apparecchio.

- NB!

De må lese bruksanvisningen før oppstillning, installasjon og start av maskinen!
Gjør det for å unngå skade på Dem selv og maskinen.

- Atenção!

Leia as instruções de utilização antes da montagem - instalação e - primeira utilizaçãoã Assim evita avarias no aparelho.

- OBS!

Läs bruksanvisningen noga före uppställning, installation och använding. Ni förebygger därmed olycksrisker och undviker skador på maskinen.

- Huomio!

Tutustukaa huolellisesti käyttöohjeeseen ennen laitteen asennusta jä käyttöönottoa.
Näin vältytte mahdollisilta vahingoilta käyttäessänne konetta.

- Внимание!

Перед установкой и эксплуатацией машины внимательно прочитайте инструкцию.
Тем самым Вы не причините ущерба ни себе, ни оборудованию

# CONTENT LIST

PAGE

**Copyright**



This manual contains the most accurate description of the product, without giving any warranties on quality levels reached or successful operation of the equipment. It was carefully checked before printing. The editors haven't gained any responsibilities literally or impliedly for any collateral damages or successive damages, which result from the use of the manual. In particular, we regret that no claims can be accepted arising from the illustrations presented in this manual. We would be grateful if you inform us on any faults or discrepancies and value your suggestions and comments.

The Lambrechts-Group is continuously occupied with the development of its machines and installations. Therefore we reserve ourselves the right of adjustments regarding technology, design and equipment.

If not otherwise indicated, the technical revision / condition as described in the manual corresponds to the equipment at the moment of dispatch from Lambrechts Konstruktie nv. Technical changes performed without any notification or consent, remain reserved and the validity of the manual no longer guarantied.

The conditions of sale and delivery of Lambrechts Konstruktie  are valid.

For any questions, you can turn in confidence to:

e-mail: sales@lambrechts-group.be

lambrechts
keeping your production in line
Gansbroekstraat 25
2870 Puurs | Belgium
T +32 3 886 79 65
F +32 3 886 79 69
www.lambrechts-group.be

# 1. Preface

This chapter provides general information about our company and the machine that you have purchase.

## 1.1. Introduction

We are delighted that you've chosen a product from the Lambrechts-Group. The Lambrechts-Group has been manufacturing machines and installations for the beverage and dairy industries from 1961 onwards.

Our machines and installations are continuously adapted to incorporate new technology; they fulfill all requirements of reliability, operational safety, control – and maintenance and this with the lowest possible footprint. For each application we offer the optimal solution.

## 1.2. General

This manual is intended for the following target group

- The user, who uses the equipment itself, or under whose supervision the equipment is used.
- The technical staff who unpacks the device, installs, performs maintenance and after-sales service.
- The processing staff, who introduce or modify parameters.
- Training staff.

**Before** installing, commissioning or using the equipment, you must read all sections of this manual as this will prevent incorrect operation. Pay special attention to the safety instructions and make sure they cohere or complement the local regulations!

At all times the manual must be available adjacent to the equipment the machine so it can be consulted when needed. Operating personnel must have a clear understanding of the machine's functions and modes of operation as described in the operating instructions. We ask you to hand over the operating instructions to actual or new users that need to perform work or operating the machine.

## 1.3. Contact

We are available at any time to provide information, support or any other service you may need.
Every machine has a name plate. Please quote the information from the plate when calling on us.

## 1.4. CE CERTIFICATE

We declare that the machine you have purchased is built according to the Machinery Directive 2006/42/EC and is marked with a CE mark on a machine type plate that can be found, as shown below. Use this information to identify your machine in any communication you have with our company. The formal CE manufacturer declaration has been added on the next page.

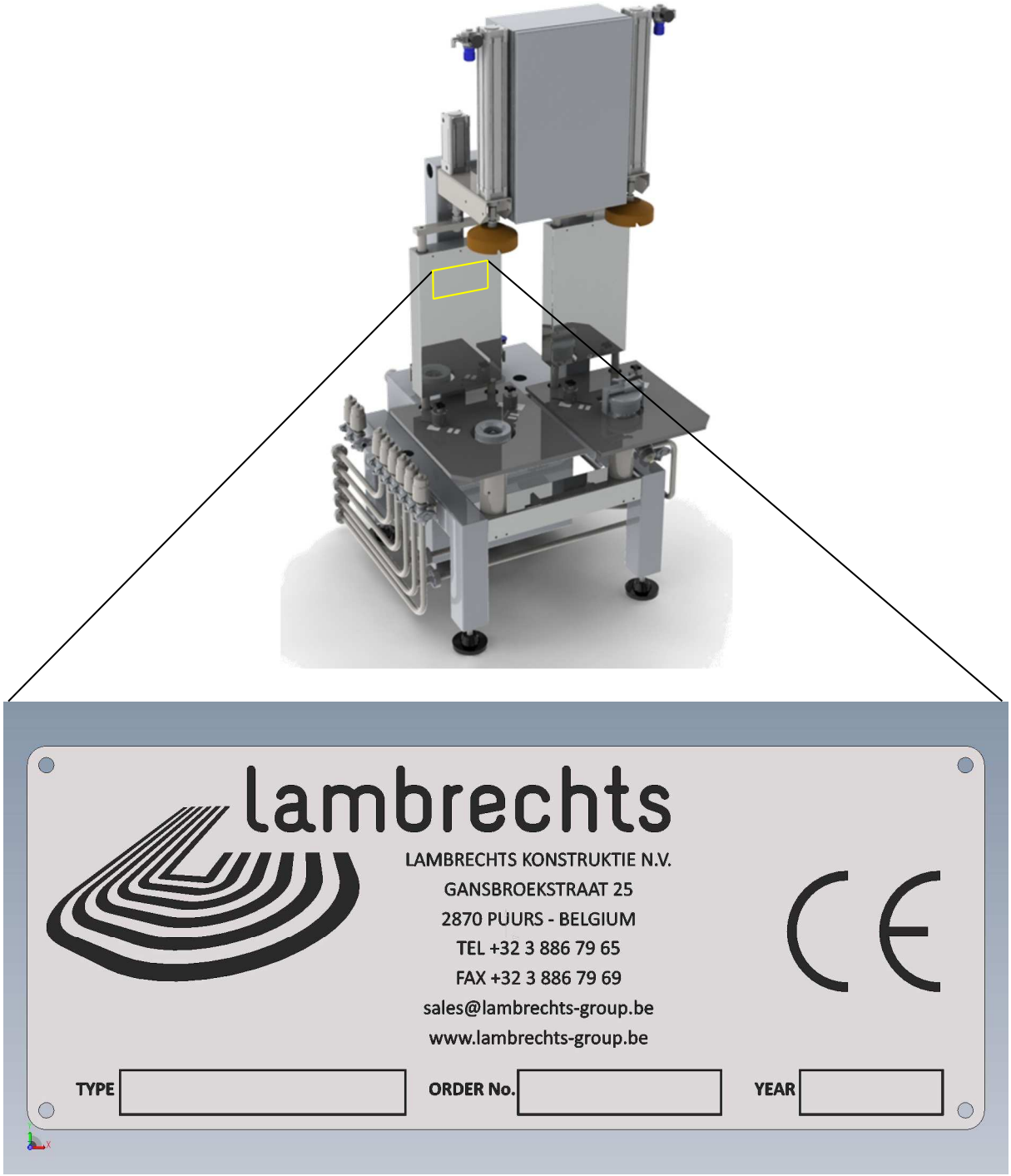

# 2. SAFETY INSTRUCTIONS

Based on a machine risk assessment using EN-ISO 12100:2010, all dangerous situations or events inherent to the machine / equipment have been identified and documented. Risk preventions has been maximized into the design of the machine/equipment and into safety instructions, where the latter pays special attention to those situations where personnel need to enter or access part of the equipment. It is therefore mandatory that the safety instructions are read and understood beforehand by anyone who is to operate the machine, perform maintenance work, or provide training as they are intended to prevent injury to personnel and damage to the machine.

Inexperienced, untrained personnel should neither install, operate, nor maintain the equipment. Failure to do so may result in personnel being injured or cause substantial damage to the equipment.

## 2.1. PICTOGRAMS AND SYMBOLS

Safety symbols and pictograms are used to make people aware of potential dangerous situations and make them aware that safety instructions need to be followed. The owner of the equipment is obliged to inform the personnel about the dangers and train them for their use. The warnings and symbols should be kept in legible condition.

### 2.1.1. WARNINGS


General notification for danger or attention


Danger electrical voltage


Danger heat surfaces


Extremely flammable


Danger corrosive


Danger clamping rotating or mechanical parts


Danger clamping for the hands


Danger hanging load


Danger fork truck

### 2.1.2. OBLIGATIONS


Wear safety helmet


Wear goggles


Wear safety helmet & goggles


Wear ear protection


Wear safety helmet, goggles & ear protection


Wear goggles & ear protection


Wear safety gloves


Wear safety shoes


Wear safety clothes


Obligated to use the foreseen cover

## 2.2. Personnel qualification

Only trained and supervised personnel should be operating or working on the machine/equipment at all times. Prove of personnel training should be made noticeable and operator instructions within hand reach. These instructions can be enhanced with user specific procedures, comments or duties to comply to all local regulations. Personnel being trained or instructed should be supervised at all times, till the full training course has been followed and successfully ended.

Individual responsibilities for personnel should be defined and specific for each operational fase, being operation, set-up, maintenance and repair. These responsibilities should also give personnel the authority to refuse instructions by third parties that compromise safety.

As a general mind set all personnel should perform the following safety check before commencing work:

- Never work alone at the machine / equipment
- Ensure that you know the location of all safety devices and First–Aid equipment.
- Ensure that the working area is free of potentially dangerous objects.
- All safety and warnings comments / symbols need to be fully readable attached on or near the machine.
- Bear in mind that employees may be working at other machines/plants in the same working area. Ensure that you do not expose them to any risk of injury when operating your machine.
- Ensure that all safety measures have been carried out so that employees not within this working area are warned of possible danger (information, warning signs).

### 2.2.1. Work on electrical systems

Electro-technical parts of the machine may only be repaired or replaced by an electrician or a trained person under the supervision and accompanied by him.

Machine and equipment, where inspection, maintenance and repair works take place, must – unless otherwise specified- be powerless. Necessary work on live parts must be carried out only in the presence of a second person who can cut off the power supply in case of danger by activating the emergency shut-off or main power supply. Secure the working-area by a safety barrier and warning signs.

As a general mind set:

- Use only isolated and other qualified equipment for electric parts.
- Use only fuses that have the regulated current intensity!
- When you notice any unusual disruption in the power supply or a defect, immediately switch off the machine and rectify the defect.
- Electrics need to be checked on a regular base.

### 2.2.2. Work on pneumatic systems – Basic responsibilities

Air pressure pipes must be erected competently and fittings as well as length and quality of piping have to be according to best practice. All pipes, connections and fittings have to be checked frequently for leaks and damages. Defects have to be solved immediately.

Before starting any maintenance or other kind of work, you always need to cut-off the machine from air pressure and all other supplies that can bring potential danger. Close the main supply of the machine/installation.

Do always check if pressure is gone, by activating a cylinder or another pneumatic part and this always under safe circumstances!

### 2.2.3. USING LUBRICANTS, GREASE, CLEANING AGENTS

When using lubricants like grease and oil or using cleaning agents like detergents and acids, you need to follow the safety instructions of the products used.

When maintenance worked is carried out on parts in contact or containing acid or caustic solutions, special appropriate protective clothing must be worn at all times.

**Disposing of cleaning agents.**
When equipment is cleaned and acid and caustic solutions are disposed off, local national regulations need to be taken into consideration.

### 2.2.4. DUST, GAS, STEAM, SMOKE

Work involving welding-, flame cutting- and grinding, can only be carried out if you have authorized and a written permission made available!

Before execution of such works the machine and its environment have to be cleared from dust and inflammable substances. If needed additional aeration needs to be provided.

### 2.2.5. NOISE

Soundproof provisions on the machine must be in their designated position during operation of machine.

## 2.3. BASIC OPERATION AND DESIGNATED USE

The machine / equipment has been built in accordance with the state-of-the-art standards and the recognized safety rules. Nevertheless, its use may constitute a risk if operated by unskilled and untrained personnel or if not used for the purpose designated for.

Improper operation or non-designated use may constitute a risk to life and limb of the user or of a third person, or may impair the machine / equipment or further material assets of the user. For any damage resulting thereof the manufacturer/supplier cannot be held liable, but the risk lies entirely with the user. Therefore, every person charged with the erection, commissioning, maintenance, repair or daily operation of the machine at the site of the user has to carefully read and understand the operating instructions.

As a matter of principle the machine may only be commissioned in the presence of qualified personnel of our company or personnel explicitly authorized by us to do so. Commissioning without such expert personnel may provoke considerable risks and is, therefore, to be refrained from.

The machine / equipment must only be used in technically perfect condition in accordance with its designated use and the instructions set out in the operating manual, and only by safety–conscious persons who are fully aware of the risks involved in operating the machine/equipment! Any functional disorders, especially those affecting the safety of the machine / equipment, should therefore be rectified immediately! The machine / equipment is designed exclusively for the agreed purpose only. Using the machine / equipment for purposes other than those mentioned above (e.g. to transport personnel) is considered contrary to its designated use. The risk of such misuse lies entirely with the user.

In the event of changes in machine / equipment behavior during normal operation which could jeopardize safety, the machine must be shut down immediately and the changes have to be reported to the supervision. No modification to the machine / equipment which could compromise safety is allowed without the supplier's approval. This also complies for the incorporation or adjustment of safety technical devices, etc.

Only use original spare parts from our company or spare parts that fulfill the same technical requirement, as only these parts will ensure the same functional and operational reliability and safety.

When installing non original spare parts or non approved parts by Lambrechts Konstruktie nv., there is a possibility that certain parts will influence the functionality of the machine and will have unexpected effects or bring unexpected insecurity along for its surrounding, work-situation, machine, persons etc.

The manufacturer is not liable for any damage resulting from the use of unapproved parts. Do not make any changes to the software of programmable control systems. As changes can potentially not only harm the normal operation of the machine / equipment, but also can jeopardize operator safety.

### 2.3.1. NORMAL OPERATION

At all times any operation mode which can cause an unsafe event, should be stopped immediately.

Before operating the machine / equipment all removable protective and safety devices, such as sound dampening, exhausts and emergency shut-off devices should be correctly positioned and secured.

Check at least once per shift the machine on visible damages/faults. Defects have to be reported immediately to supervision. If necessary stop the machine and lock it.

Check before production start (shift-start) and during production whether the foreseen working method of the machine runs smoothly and failure free (use inspection keg). In case of function failures, stop machine immediately! The failures have to be corrected.

Before switching on the machine, one has to make sure nobody can be brought in danger by the machine. Switch on and off procedures and control-indications have to be followed in accordance with manual.

### 2.3.2. MAINTENANCE, SERVICE, SOLVING MALFUNCTIONS

Follow the maintenance instructions as part of the manual to inspect, adjust or replace parts of the machine / equipment. These activities can only be performed by qualified and skilled personnel.

Always inform and communicate with operating personnel before commencing the special operations or maintenance work. One person should be appointed as supervisor during the works. Once the work has been ended, the start up / shut-down procedures as set out tin the manual should be followed.

When executing work for which the machine must be shut down, you must insure that the main power supply can't be switch on again until the works are completed.

- Lock the principal control elements and remove the key and/or
- Visualize the works by putting up a warning sign on the main switch.

When changing any parts or sections of the machine / equipment with the help of lifts or crane, you must insure that these objects are carefully fasten up and secured. Always use lifting gear and suspension systems with adequate lifting capacity. Never work or stand under suspended loads.

For the removal of charges and the operation of the lifts, only use qualified staff.
Persons that have to give instructions, have to be at visual or voice distance of the operator.

For carrying out overhead work, safety ladders for reaching platforms have to be used. Machine and machine parts may not be used as ladders. For working at greater heights, safety harnesses have to be worn!
The safety ladders, platforms... and also their rails and grips have to be kept free of dirt.

Machines, machine parts and especially the connections and threaded unions must be cleared of oil and other dirt that can harm the work before maintenance. Clean this carefully with qualified cleaning agent. Use non-fluff cleaning rags.

Before cleaning the machine with water, steam jet or detergents, you must cover or close all openings/parts to prevent any harm to the machine or the handled product afterwards in operation. These are mainly openings/parts which, for safety or functional reasons, no water, cleaning agents nor steam may enter.
After cleaning, all covers must be removed before operating the machine!
Make sure to retighten or secure all connections which have been loosened during the maintenance or repair work.

Please make sure to remove all work-, cleansing products and changed spare parts in an ecologically sound way!

## 2.4. Organizational measures

In addition to the operating instructions, observe and instruct the user in all other generally applicable legal and other regulations to accident prevention and environmental protection, and can include the handling of hazardous substances, issuing and/or wearing protective equipment, or traffic regulations.

Further enhancements can cover duties involved in supervising and notifying supervision in case of abnormalities or job organization or working sequences.

Frequent follow up whether the personnel carries out the work in compliance with the operating instructions is advised. Special attention should be given to risk and safety factors.

See to it that safety instructions and warnings attached the machine are always complete and perfectly legible.

# 3. MACHINE INSTALLATION

## STEP 1

Place the package with a fork truck as near as possible to its location.

- Remove the package and contents as described

**THE MACHINE CAN ALSO BE DELIVERD WRAPPED IN PLASTIC OR INSIDE A CONTAINER WITH OTHER MACHINES!**

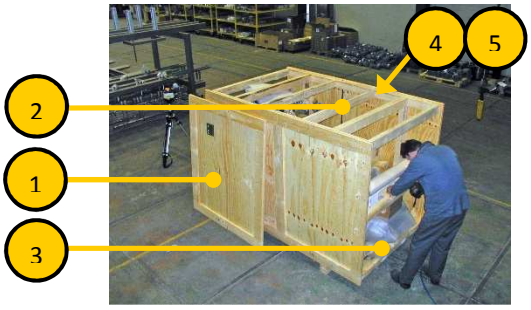


1 - Crate panels (leave bottom)
2 - All panels supports
3 - Remove plastic covers
4 - User guides – send the receipts to us
5 - Spare parts if include

## STEP 2

lift the machine with a qualified lifting belt that is fastened to the frame support.

- Place it on the clean, prepared floor.
- Level the machine by adjusting the feet.

**CAUTION THAT NO PARTS ARE BEEN DAMAGED BY THE LIFTING BELT**

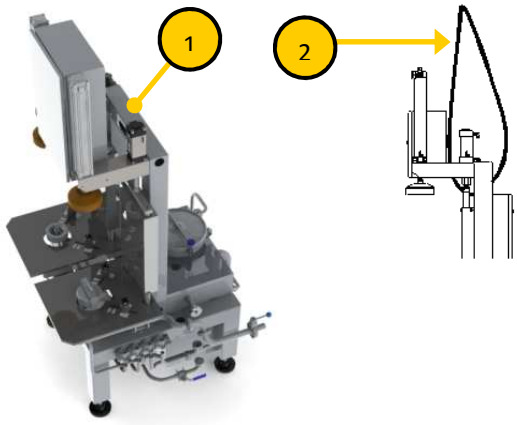


1 - Frame support
2 - Lifting belt

# 4. MACHINE DESCRIPTION

This machine allows for the following kegs to be washed and filled semi-automatically:

- EURO/DIN
- Plus Keg
- Junior Plus Keg
- Eco Keg
- ……




Due to the variety of the kegs, it may be necessary that keg-type-specific adapter pieces need to be used. Pending the customer requirement, they will be shipped and made available at the delivery of the machine.

## 4.1. MECHANICAL ASSEMBLY

Below an overview of the main machine assembly groups.

Pneumatic lift tables

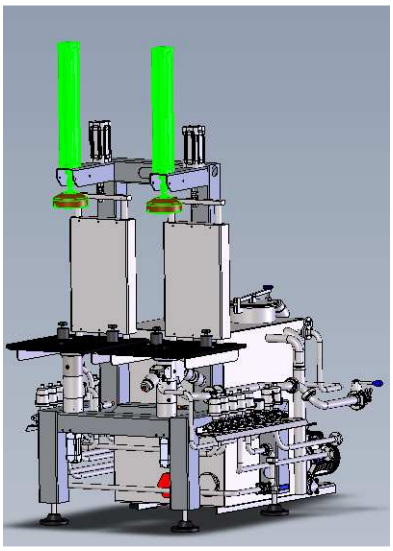

Pneumatic hold down cylinders

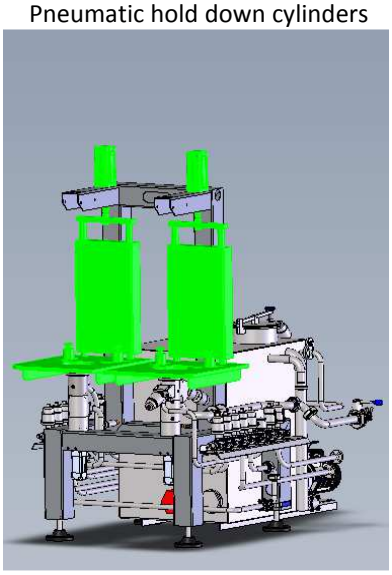

Electro/pneumatic cabinet

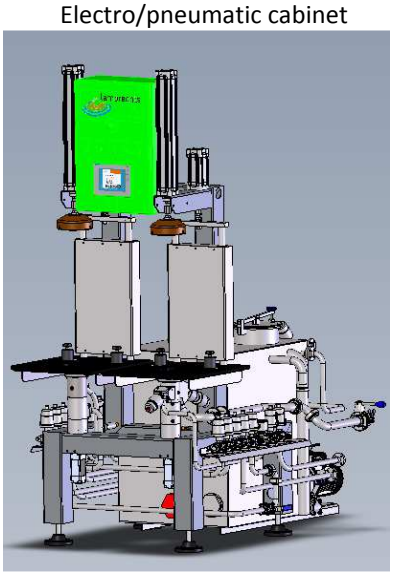

Machine frame

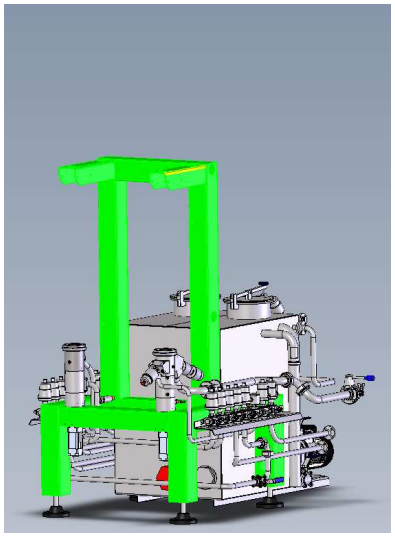

Detergent and hot water tank

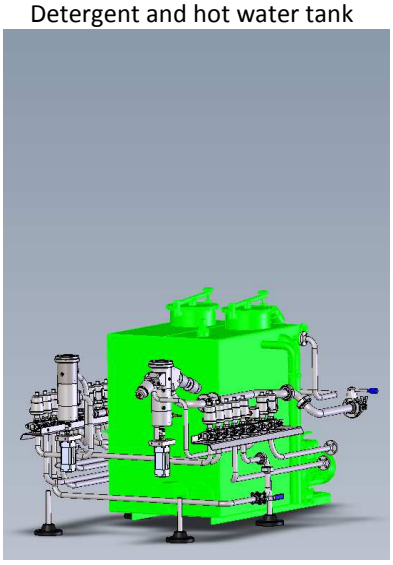

Media supply

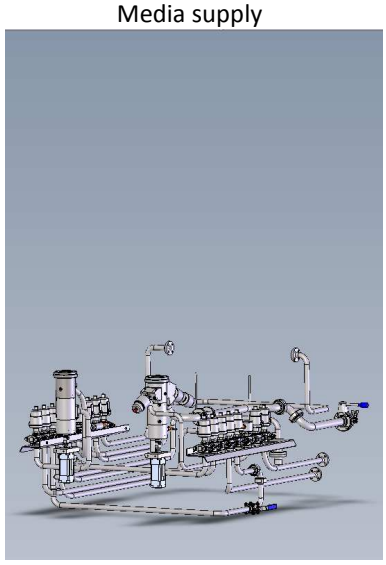

## 4.2. Process heads and connection with the keg

The process head is responsible for the connection with the keg through which it is possible to charge media in and out of the keg. Once the outer edge of the spear head is pressed onto the inner rubber seal, the central rising spear shaft in the process head is lifted by means of a pneumatic cylinder and the keg spear is opened. Here, a physical connection is made with the gas port and the beer port of the keg.

The beer port is the opening through which the beer is dispensed and is forced out by the CO2 pressure being inserted via the gas port. During keg filling, this direction is reversed and beer is entered through the gas port under an exiting controlled CO2 back pressure which determines the rate of filling.

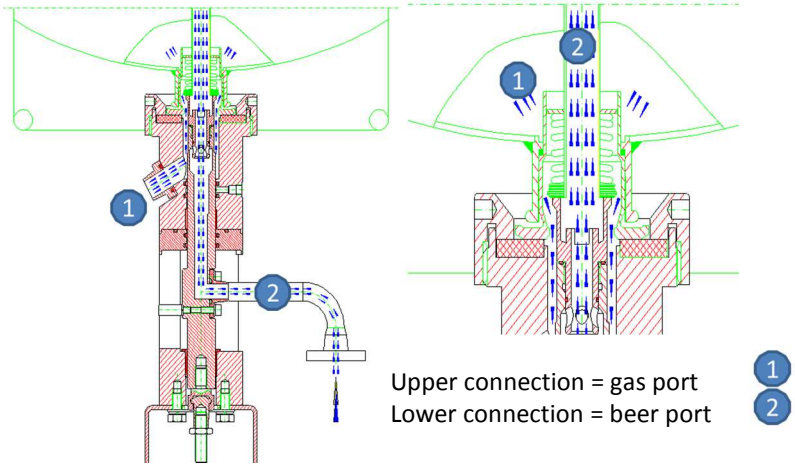

## 4.2.1. CLEANING HEAD AND CONNECTIONS

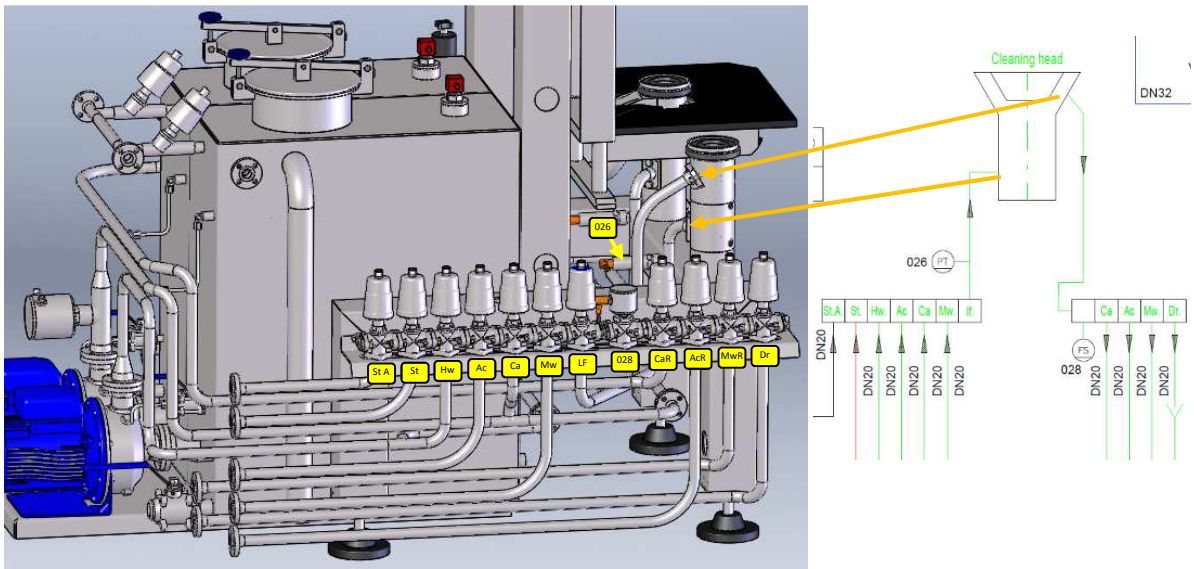


## 4.2.2. FILLING HEAD AND CONNECTIONS

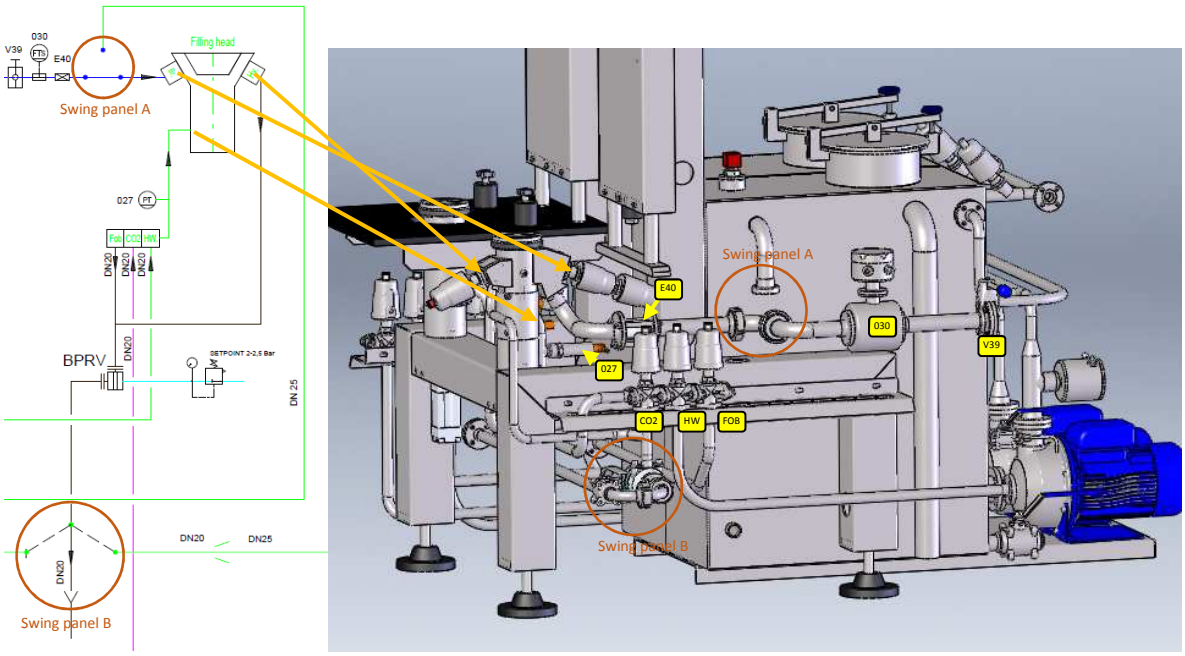

## 4.3. Detergent and hot water tank

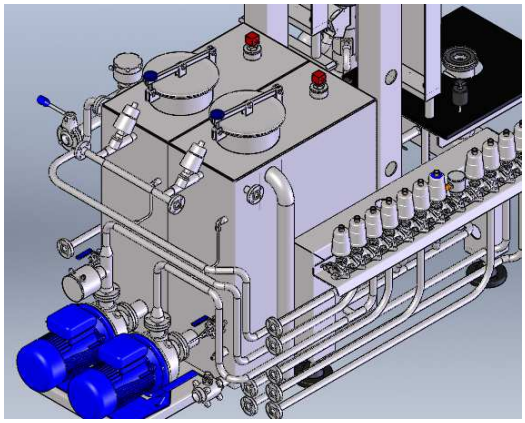

On the backside of the machine, a detergent and a hot water tank are provided.
Detergent is prepared, stored and conditioned in the left tank. The second tank is used to prepare and store hot water.
A single stage centrifugal pump feeds the process heads, whereas compressed air purges detergent from the heads back into the tank. After usage, the hot water is returned to the mixed water tank.
The temperature of detergent and water is maintained using a close loop temperature measurement controlling a submerged steam coil.

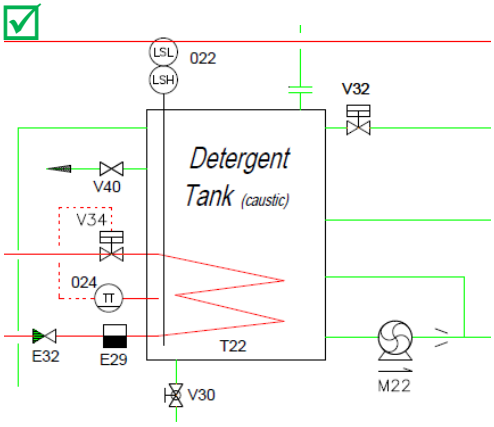


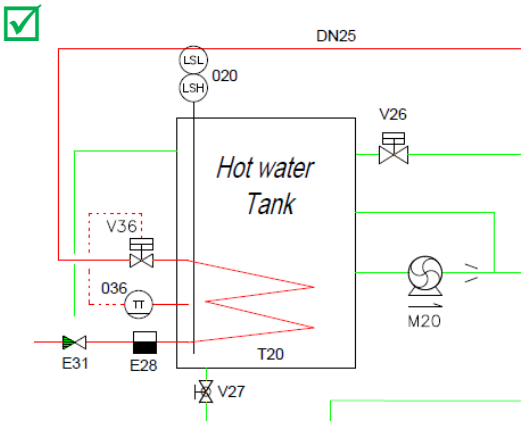


## 4.4. Acid and mixed water tank

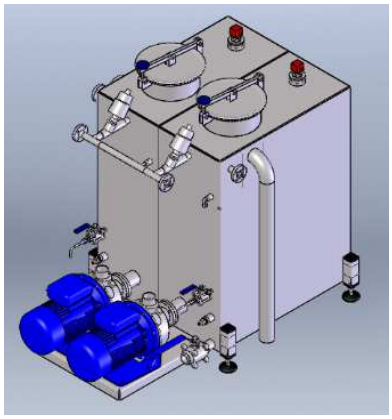

The extra single or double tank beside the machine is used for storage of acid and/or mixed water.

Acid is prepared, stored and conditioned in the left tank. The second tank is used to store mixed water.
A single stage centrifugal pump feeds the process heads, whereas compressed air purges acid and mixed water from the heads back into the tanks. The mixed water is a reuse of the hot water. After usage, the mixed water is wasted via the drain.

The temperature of the acid is maintained using a close loop temperature measurement controlling a submerged steam coil.

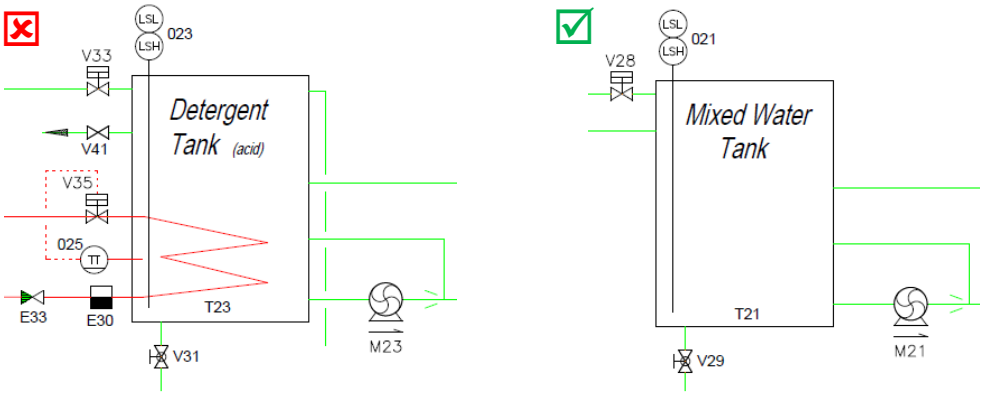


## 4.5. P&ID

A piping and instrumentation diagram, acronym P & ID, is a technical drawing which schematically shows how pipes and other parts of a process plant are connected to each other. Instrumentation is added in order to create a first step for process control.

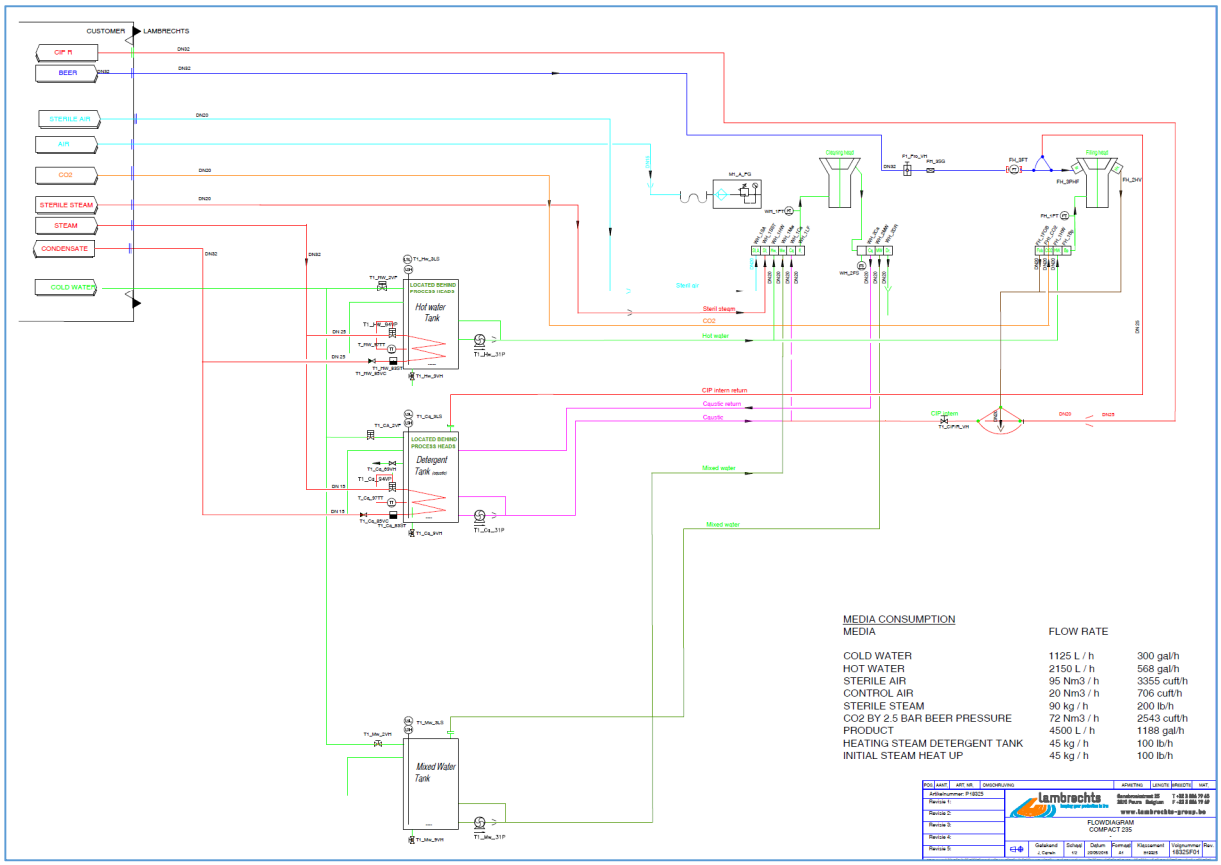

# 5. PROCESS CONTROLS

In addition to the mechanical assembly and the placement of the media valves, sensors and piping as indicated above in the P & ID, determines the PLC control on how the process of cleaning and filling is carried out, and at what point and for how long the media valves and pneumatic actuators are activated. This process flow is uniquely defined in a process sequence list.

## 5.1. PROCESS SEQUENCE LIST

The process sequence list is a representation of all process steps in order of occurrence in time. For each process step, the number of participating media valves are indicated with an estimated completion time and the maximum process time. The latter is used to detect failures and to generate warnings.

| PROCESS STEPS CLEANING | | | | MEDIA VALVES | | | | | | | | | | | |
|---|---|---|---|---|---|---|---|---|---|---|---|---|---|---|---|
| Washing head | Description | TIME [s] | TIME [s] | St. Air | Steam | Mixed Water | Hot Water | Caustic | Acid | Low Flow | Caustic Return | Acid Return | Mixed water Return | Drain | Spear |
| | | 15L/20L/30L | Limits | WH_YP_SA | WH_YP_St | WH_YP_MW | WH_YP_HW | WH_YP_Ca | WH_YP_Ac | WH_YP_LF | WH_YP_Ca/R | WH_YP_Ac/R | WH_YP_MW/R | WH_YP_Dr | WH_YP_Spear/U |
| STEP 1 | WH: Engage clamp | 1,5 | 1,5 | | | | | | | | | | | | |
| STEP 2 | WH: Engage table | 1 | 1 | | | | | | | | | | | | |
| STEP 3 | WH: Pressurise head | 0,5 | 0,5 | X | | | | | | X | | | | | |
| STEP 4 | WH: Head leak check / delay | 1 | 1 | | | | | | | | | | | | |
| STEP 5 | WH: Depressurise head | 0,5 | 0,5 | | | | | | | | | | | X | |
| STEP 6 | WH: Spear in | 1 | 5 | | | | | | | | | | | | X |
| STEP 7 | WH: Residual pressure check | 1 | 1 | | | | | | | | | | | | X |
| STEP 8 | WH: Depressurise keg | 2 | 2 | | | | | | | | | | | X | X |
| STEP 9 | WH: Blow out keg | 1,5 | 50 | X | | | | | | X | | | | X | X |
| STEP 10 | WH: Wash 1 (mixed water) **cold water** | 7 | 7 | | | X | | | | X | | | | X | X |
| STEP 11 | WH: Blow out wash 1 | 4 | 10 | X | | | | | | X | | | | X | X |
| STEP 12 | WH: Wash 2 (caustic) | 27 | 27 | | | | | X | | 0/1 | X | | | | X |
| STEP 13 | WH: Blow out wash 2 | 4 | 10 | X | | | | | | X | X | | | | X |
| STEP 14 | WH: Wash 3 (mixed water) **jump to step 18** | 0 | 0 | | | X | | | | X | | | | X | X |
| STEP 15 | WH: Blow out wash 3 | 0 | 0 | X | | | | | | X | | | | X | X |
| STEP 16 | WH: Wash 4 (acid) | 0 | 0 | | | | | | X | 0/1 | | X | | | X |
| STEP 17 | WH: Blow out wash 4 | 0 | 0 | X | | | | | | X | | X | | | X |
| STEP 18 | WH: Wash 5 (hot water) | 12 | 12 | | | | X | | | 0/1 | | | | X | X |
| STEP 19 | WH: Blow out wash 5 | 4 | 10 | | X | | | | | X | | | | X | X |
| STEP 20 | WH: Purge keg to temperature 1 (steam) | 3 | 3 | | X | | | | | X | | | | X | X |
| STEP 21 | WH: Pressurise keg 1 (steam) | 4 | 4 | | X | | | | | X | | | | | X |
| STEP 22 | WH: Pressure check 1 | 1 | 1 | | | | | | | X | | | | | X |
| STEP 23 | WH: Steam hold | 4 | 4 | | | | | | | X | | | | | X |
| STEP 24 | WH: Depressurise keg | 1 | 1 | | | | | | | X | | | | X | X |
| STEP 25 | WH: Purge keg to temperature 2 (steam) | 2 | 2 | | X | | | | | X | | | | X | X |
| STEP 26 | WH: Pressurise keg 2 (steam) | 4 | 4 | | X | | | | | X | | | | | X |
| STEP 27 | WH: Steam pressure check 2 | 1 | 1 | | | | | | | X | | | | | X |
| STEP 28 | WH: Spear out | 1 | 5 | | | | | | | | | | | | |
| STEP 29 | WH: Depressurise head | 0,5 | 0,5 | | | | | | | | | | | X | |
| STEP 30 | WH: Release Table / Clamp | 2 | 2 | | | | | | | | | | | | |
| STEP 31 | WH: End of process | 89,5 | | | | | | | | | | | | | |

☒ No acid tank

It's important to understand the difference between a low flow valve and a standard media valve. The difference being that a normal valve is shut when not activated, whereas a low flow maintains a reduced flow even when not activated. This is realized by a small orifice created into the main shaft of the valve connecting the volume before and after the valve. A low flow valve is always used in combination with a standard valve. The choking effect of the low flow valve can be used for pulsating washes or choking the flow of outgoing gases.

| PROCESS STEPS FILLING | | | | | | MEDIA VALVES | | | | | | |
|---|---|---|---|---|---|---|---|---|---|---|---|---|
| Filling head | Description | TIME [s] Standard | TIME [s] One-Way Dolium / Polyke | TIME [s] One-Way Petainer | TIME [s] | Fob | 1CO2 | Hot Water | Low Flow | Drain | Product | Spear |
| | | 15L/20L/30L | 20L/30L Not Running | 20L/30L Not Running | Limits | FH-1FOB | FH-1CO2 | FH-1HW | FH-1LF | FH-2Dr | FH-PHF | FH_YP_Spear /U |
| STEP 1 | FH: Engage clamp | 1 | 1 | 1 | 1 | | | | | | | |
| STEP 2 | FH: Engage table | 1 | 1 | 1 | 1 | | | | | | | |
| STEP 3 | FH: Pressurise head | 0,5 | 0,5 | 3 | 0,5/3 | | X | | X | | | |
| STEP 4 | FH: Head leak check / delay | 1 | 1 | 1 | 1 | | | | X | | | |
| STEP 5 | FH: Depressurise head | 0,5 | 0,5 | 0,5 | 0,5 | X | | | X | X | | |
| STEP 6 | FH: Steam hold | 15 | 0 | 0 | 15/0 | | | | X | | | |
| STEP 7 | FH: Wash head | 2 | 2 | 2 | 2 | | | X | X | X | | |
| STEP 8 | FH: Blow out head | 2 | 4 | 4 | 2/4 | | X | | X | X | | |
| STEP 9 | FH: Depressurise head | 0,5 | 0,5 | 0,5 | 0,5 | X | | | X | X | | |
| STEP 10 | FH: Spear in | 1 | 1 | 1 | 5 | | | | X | | | X |
| STEP 11 | FH: Pressure check (steam or CO2) | 1 | 1 | 0 | 1 | | | | X | | | X |
| STEP 12 | FH: Release steam pressure | 3 | 0 | 0 | 3 | X | | | X | X | | X |
| STEP 13 | FH: Pressurise CO2 (one-way) | 0 | 0,5 | 0,5 | 0/0,5 | | X | | X | | | X |
| STEP 14 | FH: CO2 Purge | 5 | 12 | 12 | 5/12 | | X | | X | X | | X |
| STEP 15 | FH: Fill keg with CO2 + pressure check | 3 | 3 | 3 | 7 | | X | | X | | | X |
| STEP 16 | XFH: Product Fill (no Fob) | 3 | 3 | 3 | 3 | | | | | | X | X |
| STEP 17 | FH: Product Fill | 30 | 25 | 25 | 60 | X | | | | | X | X |
| STEP 18 | FH: Spear out | 1 | 1 | 1 | 5 | | | | | | | |
| STEP 19 | FH: Blow out head (scavenge) | 2 | 2 | 2 | 2 | | X | | X | X | | |
| STEP 20 | FH: Wash head and fitting | 2 | 2 | 2 | 2 | | | X | X | X | | |
| STEP 21 | FH: Blow out head | 2 | 4 | 4 | 2/4 | | X | | X | X | | |
| STEP 22 | FH: Depressurise head | 0,5 | 0,5 | 0,5 | 0,5 | X | | | X | X | | |
| STEP 23 | FH: Release table/clamp | 2 | 2 | 2 | 2 | | | | | | | |
| STEP 24 | FH: End of process | 79 | 67,5 | 69 | | | | | | | | |

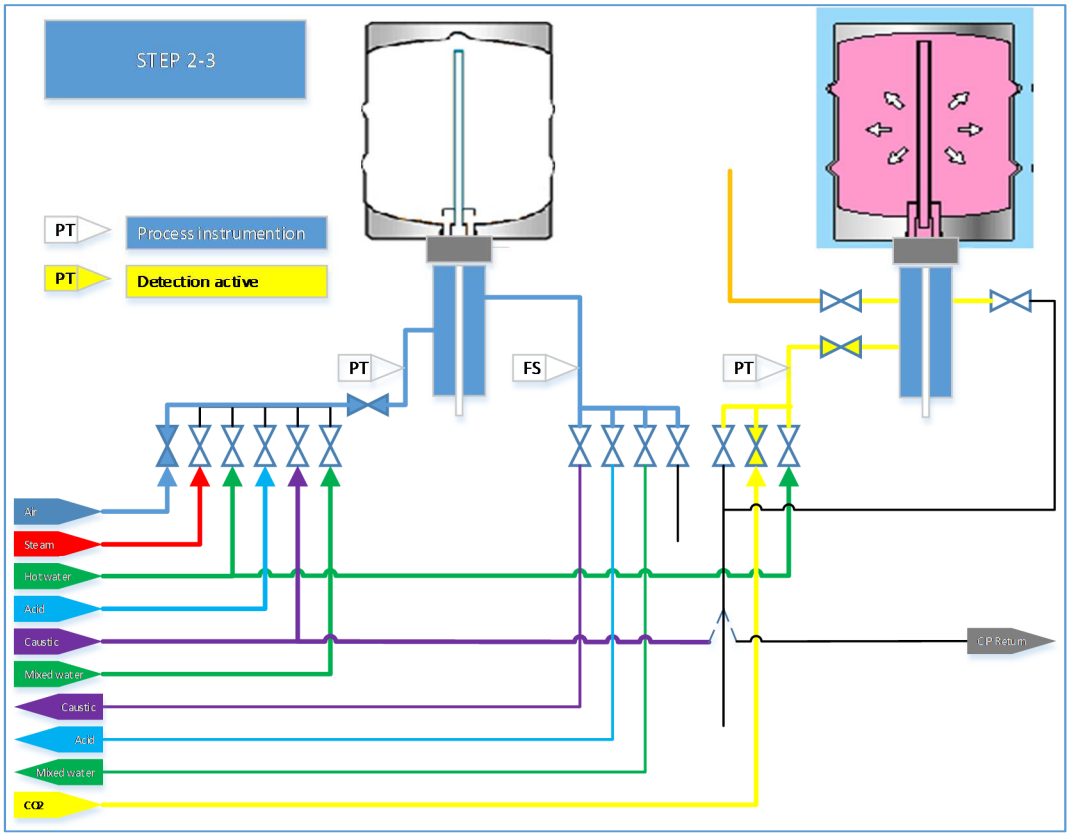

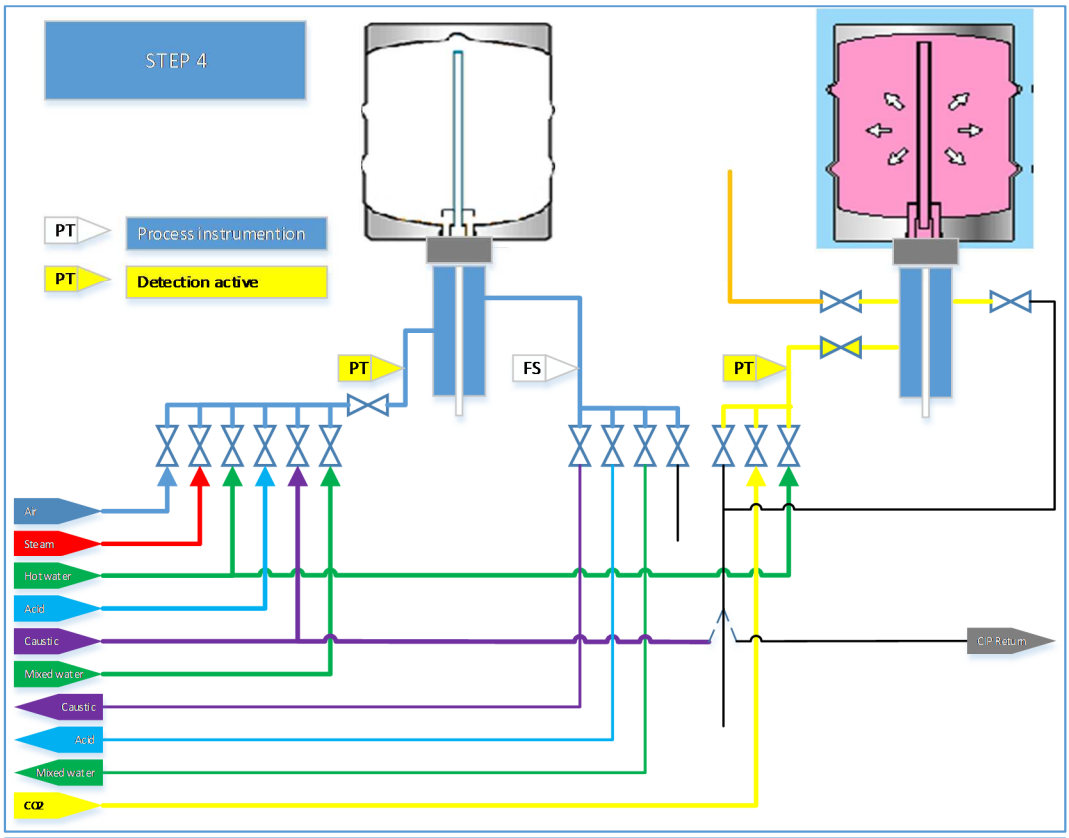
STEP 4
PT
Process instrumention
PT
Detection active
PT
FS
PT
Air
Steam
Hot water
Acid
Caustic
Mixed water
Caustic
Acid
Mixed water
CO2
CIP Return

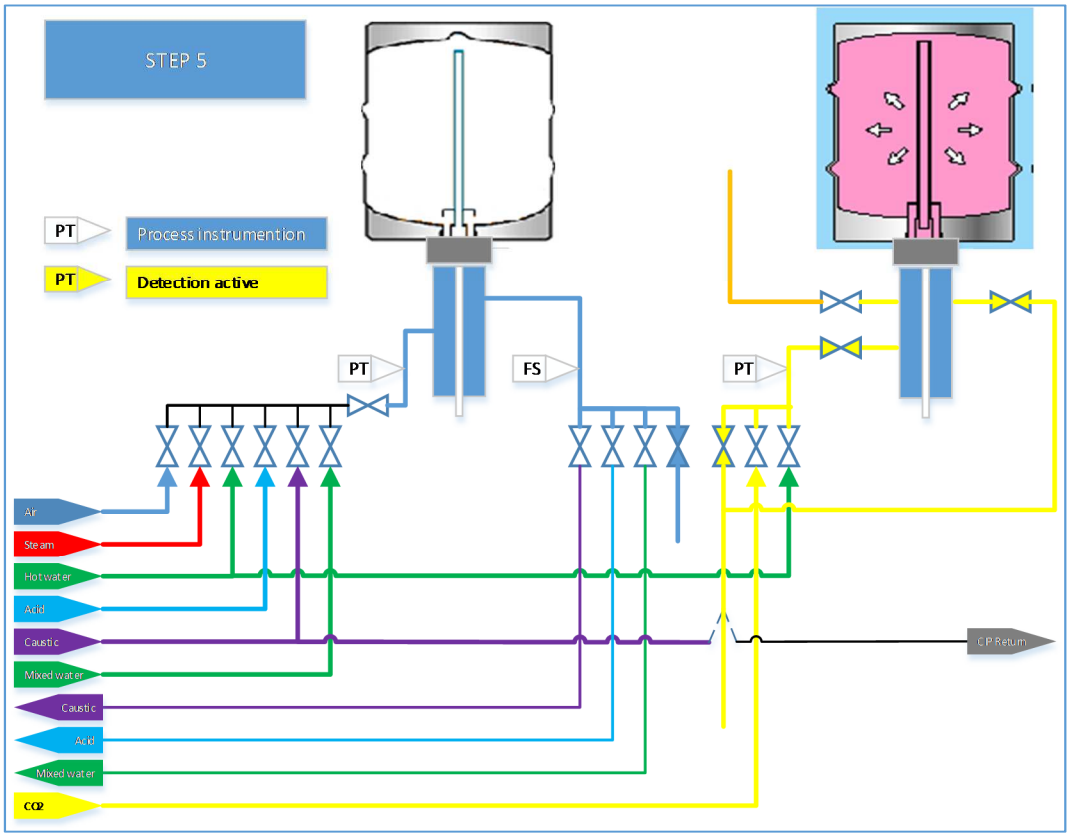
STEP 5
PT
Process instrumention
PT
Detection active
PT
FS
PT
Air
Steam
Hot water
Acid
Caustic
Mixed water
Caustic
Acid
Mixed water
CO2
CIP Return

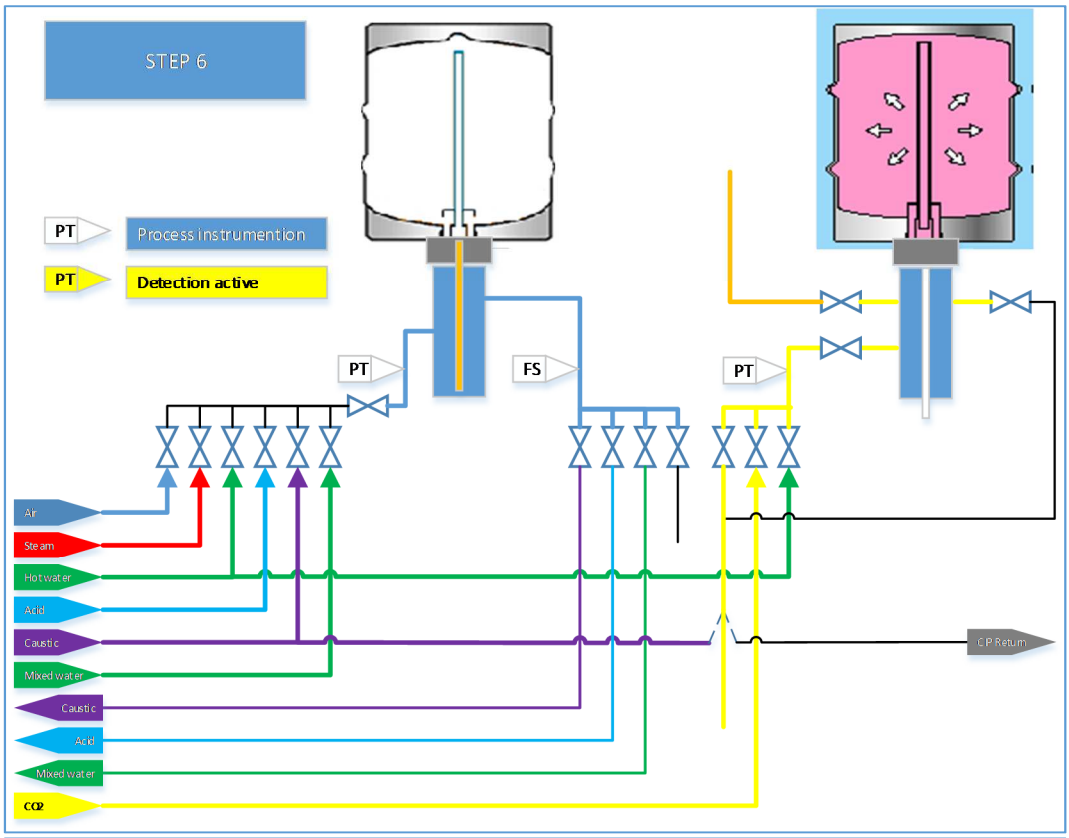
STEP 6
PT
Process instrumention
PT
Detection active
PT
FS
PT
Air
Steam
Hot water
Acid
Caustic
Mixed water
Caustic
Acid
Mixed water
CO2
CIP Return

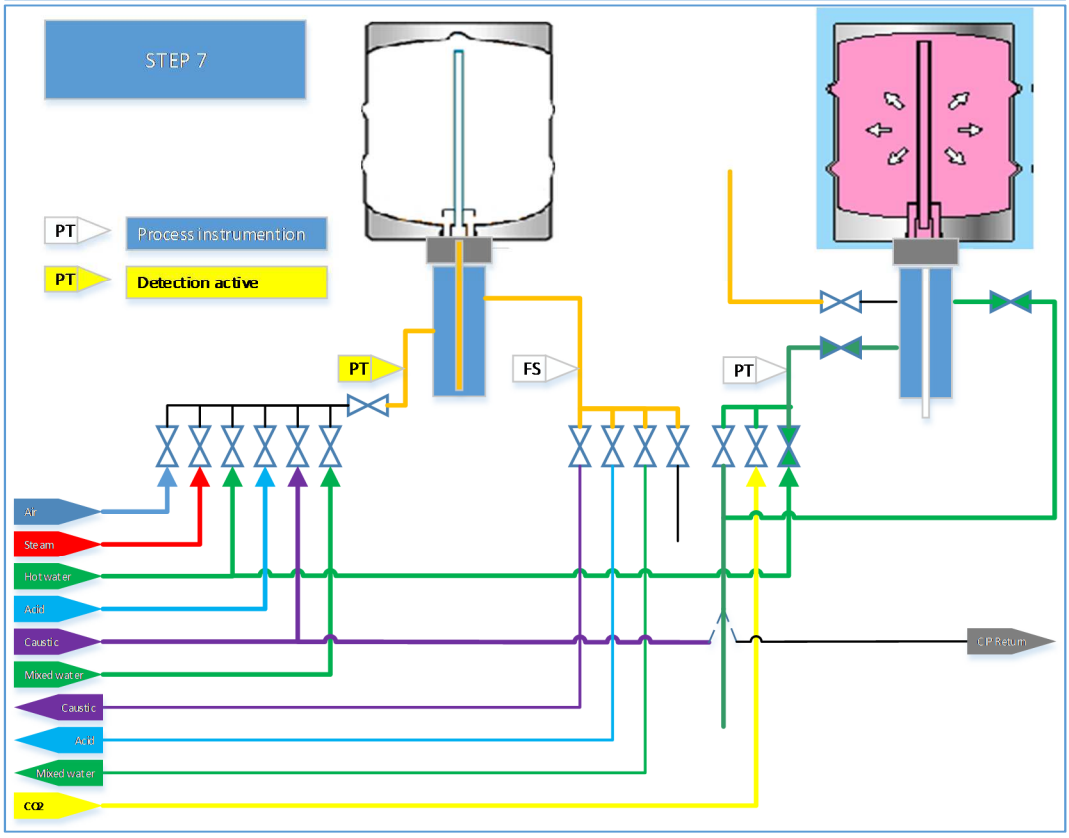
STEP 7
PT
Process instrumention
PT
Detection active
PT
FS
PT
Air
Steam
Hot water
Acid
Caustic
Mixed water
Caustic
Acid
Mixed water
CO2
CIP Return

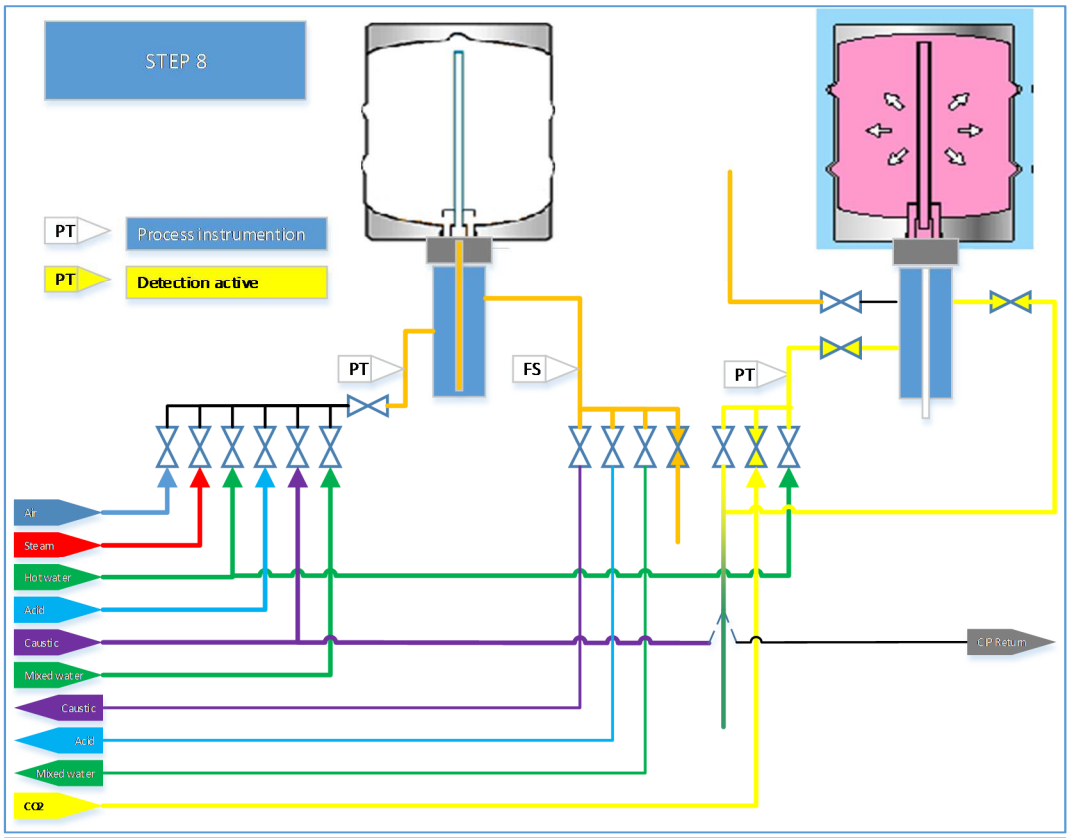
STEP 8
PT
Process instrumention
PT
Detection active
PT
FS
PT
Air
Steam
Hot water
Acid
Caustic
Mixed water
Caustic
Acid
Mixed water
CO2
CIP Return

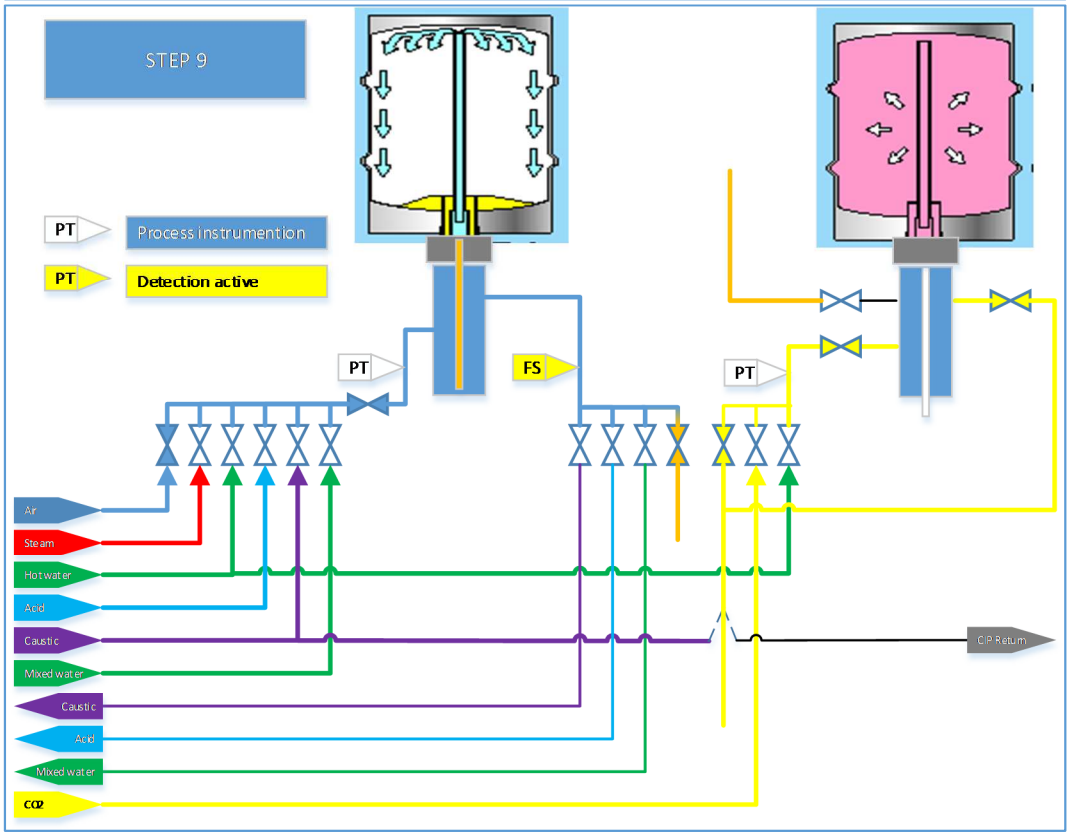
STEP 9
PT
Process instrumention
PT
Detection active
PT
FS
PT
Air
Steam
Hot water
Acid
Caustic
Mixed water
Caustic
Acid
Mixed water
CO2
CIP Return

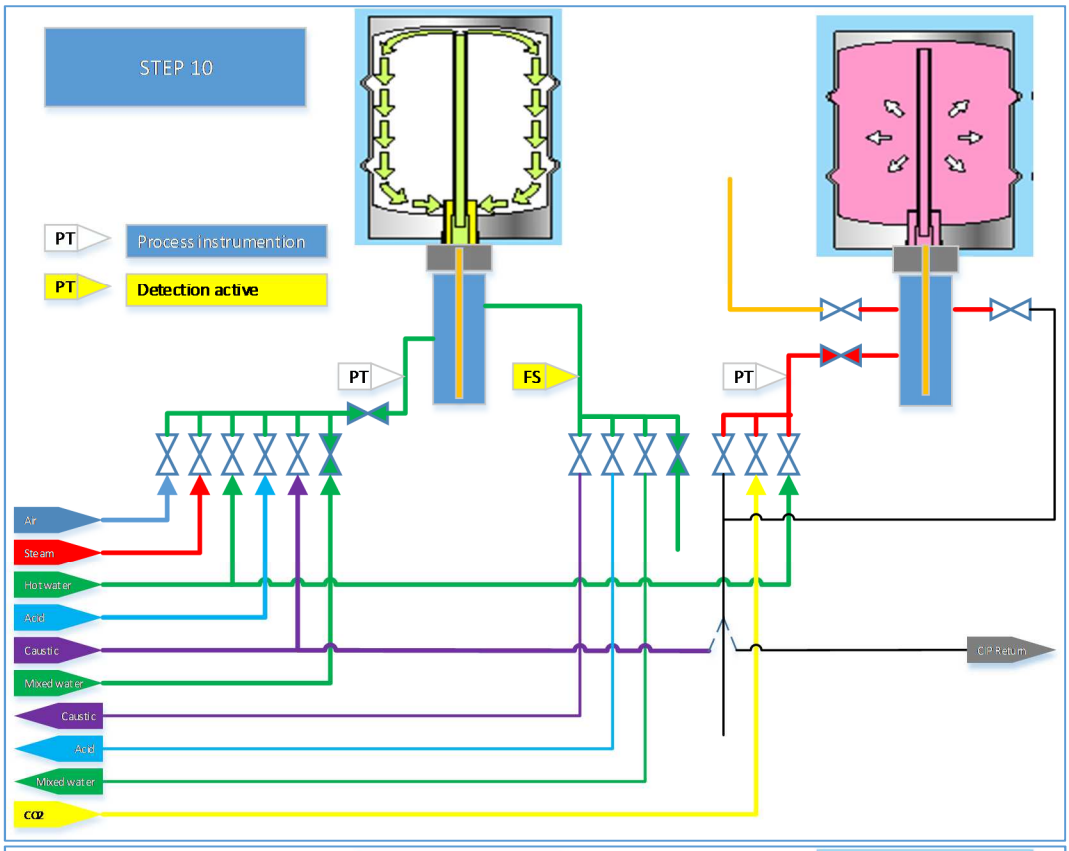
STEP 10
PT
Process instrumention
PT
Detection active
PT
FS
PT
Air
Steam
Hot water
Acid
Caustic
Mixed water
Caustic
Acid
Mixed water
CO2
CIP Return

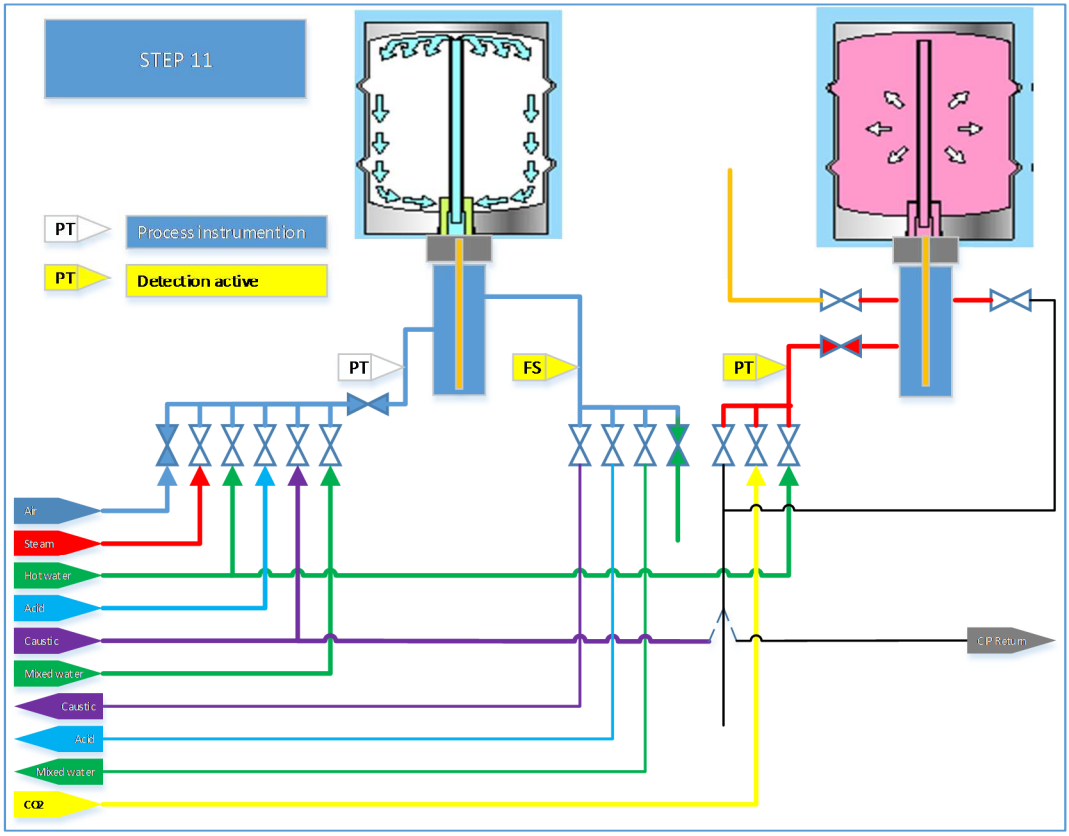
STEP 11
PT
Process instrumention
PT
Detection active
PT
FS
PT
Air
Steam
Hot water
Acid
Caustic
Mixed water
Caustic
Acid
Mixed water
CO2
CIP Return

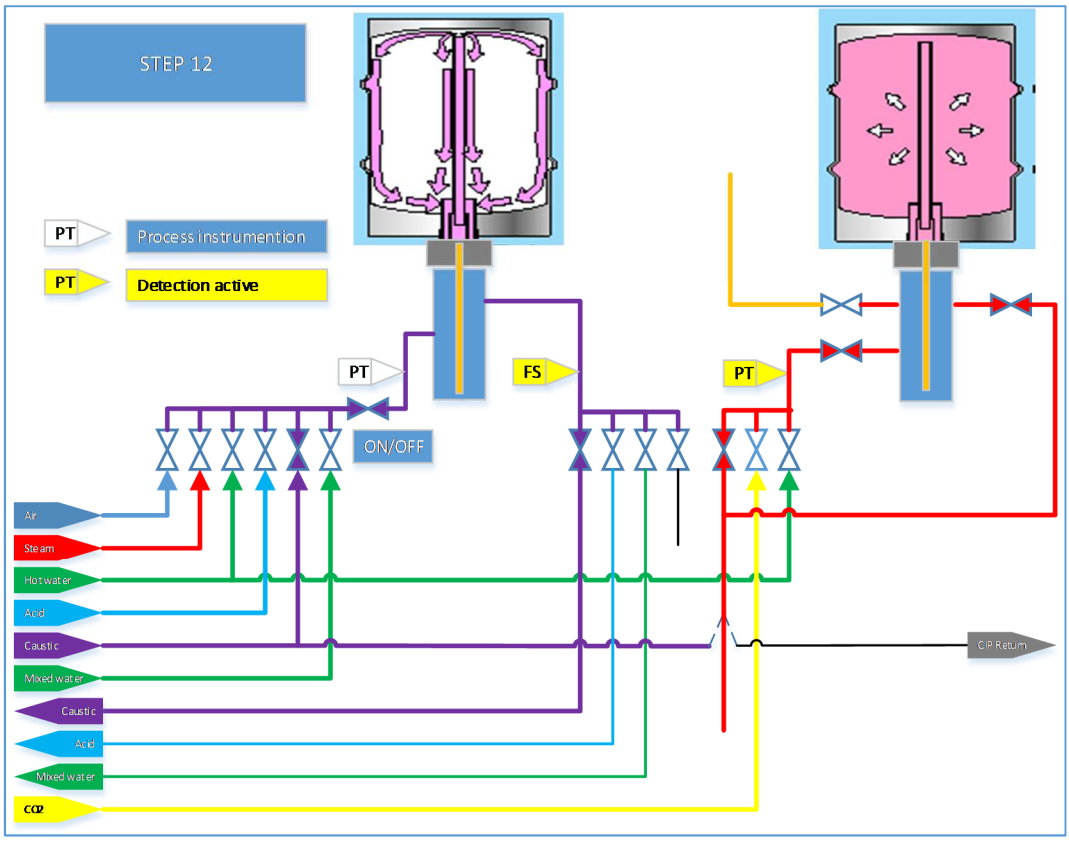
STEP 12
PT
Process instrumention
PT
Detection active
PT
FS
PT
ON/OFF
Air
Steam
Hot water
Acid
Caustic
Mixed water
Caustic
Acid
Mixed water
CO2
CIP Return

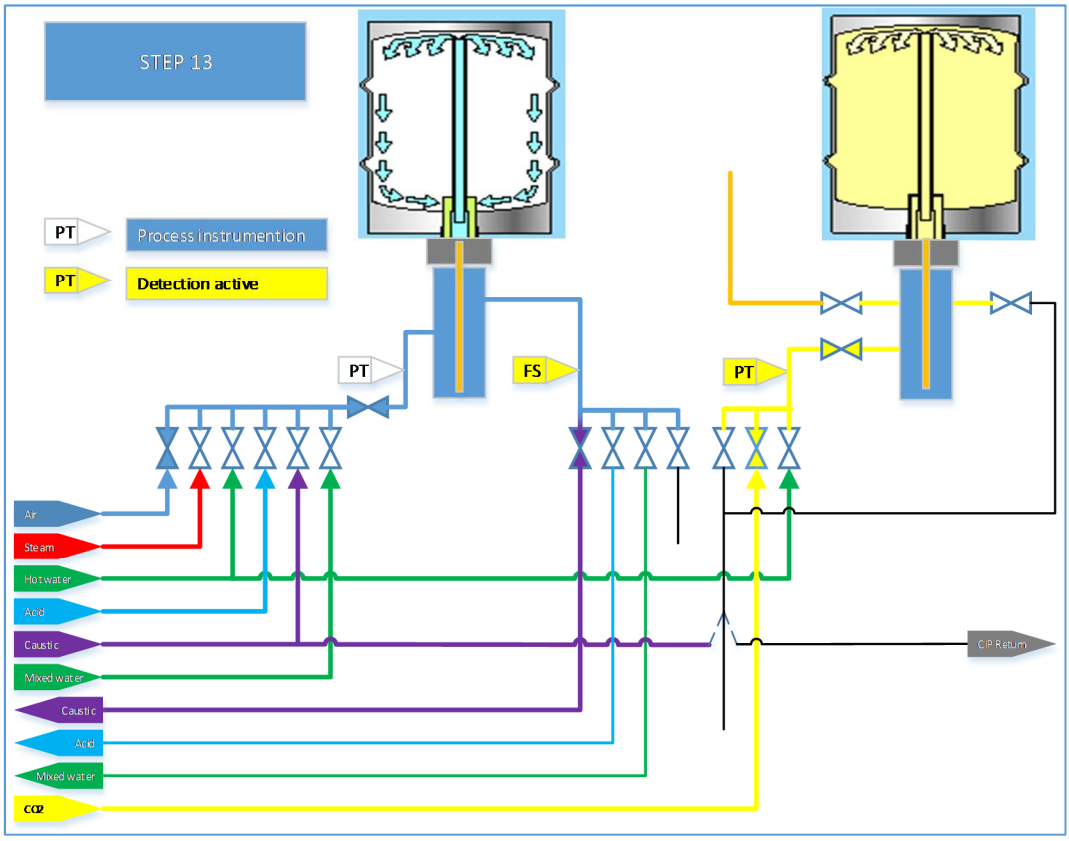
STEP 13
PT
Process instrumention
PT
Detection active
PT
FS
PT
Air
Steam
Hot water
Acid
Caustic
Mixed water
Caustic
Acid
Mixed water
CO2
CIP Return

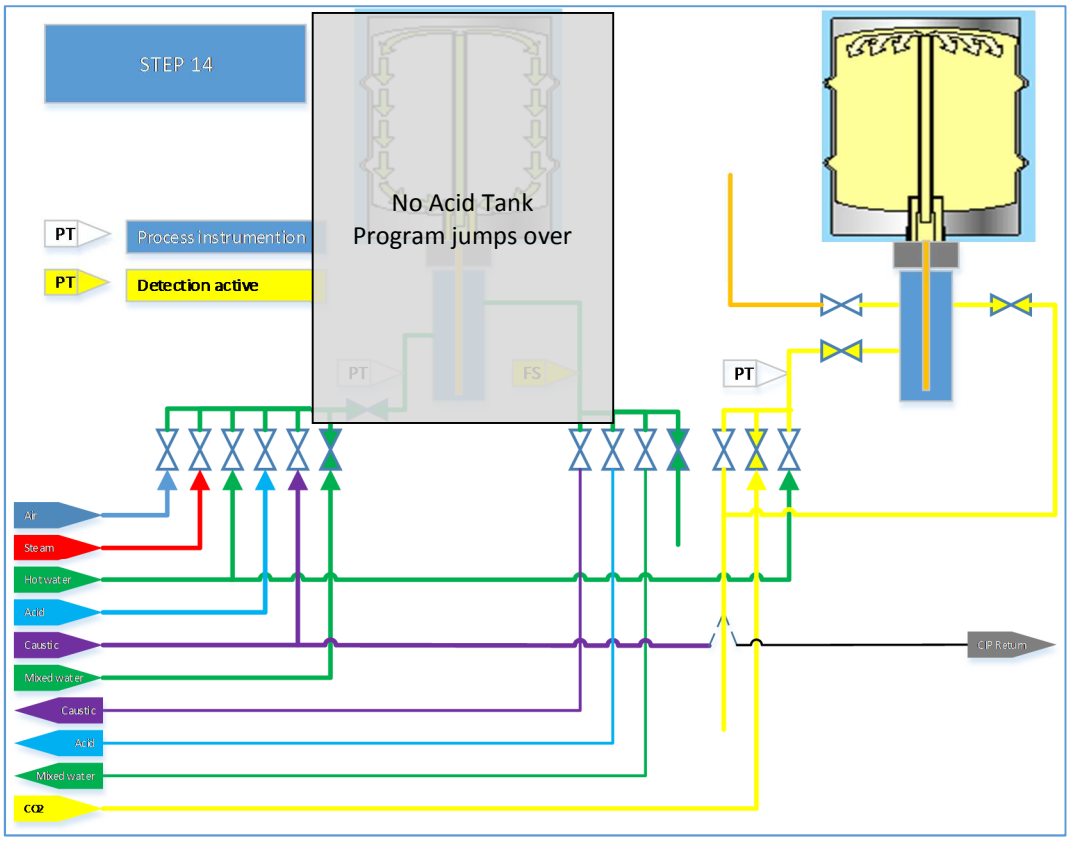
STEP 14
No Acid Tank
Program jumps over
PT
Process instrumention
PT
Detection active
PT
FS
PT
Air
Steam
Hot water
Acid
Caustic
Mixed water
Caustic
Acid
Mixed water
CO2
CIP Return

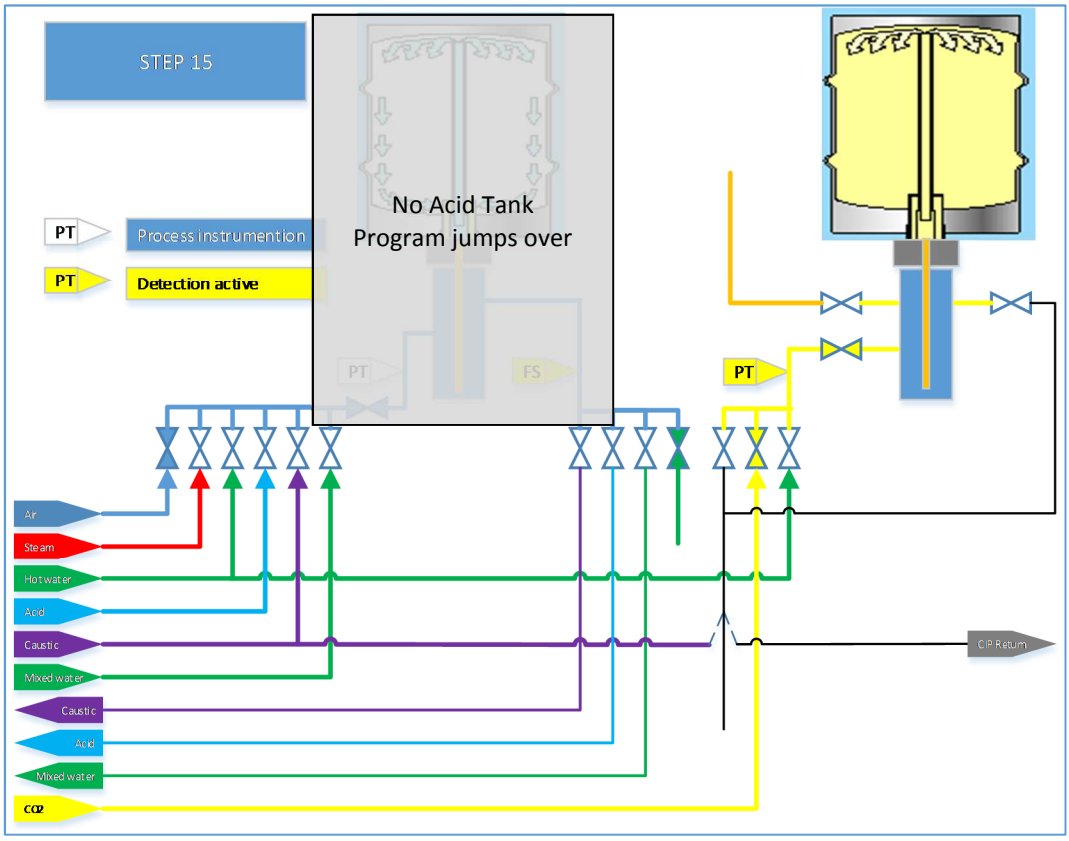
STEP 15
No Acid Tank
Program jumps over
PT
Process instrumention
PT
Detection active
PT
FS
PT
Air
Steam
Hot water
Acid
Caustic
Mixed water
Caustic
Acid
Mixed water
CO2
CIP Return

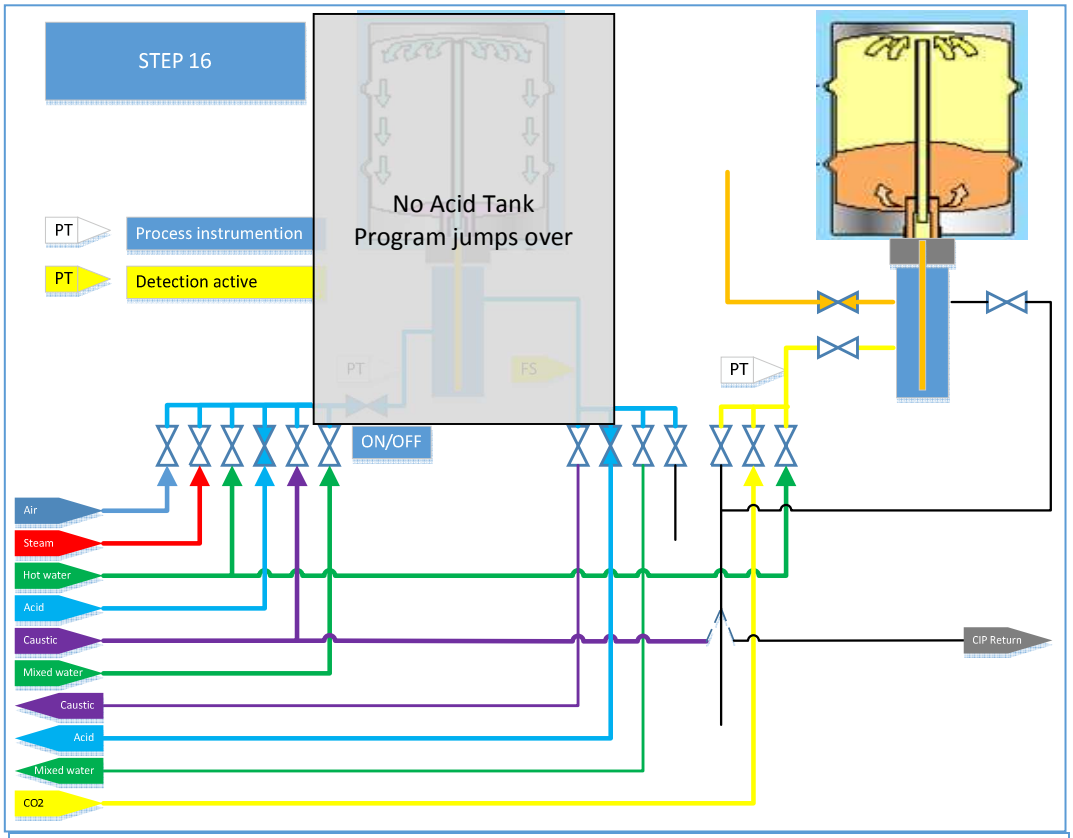
STEP 16
No Acid Tank
Program jumps over
PT
Process instrumention
PT
Detection active
PT
FS
PT
ON/OFF
Air
Steam
Hot water
Acid
Caustic
Mixed water
Caustic
Acid
Mixed water
CO2
CIP Return

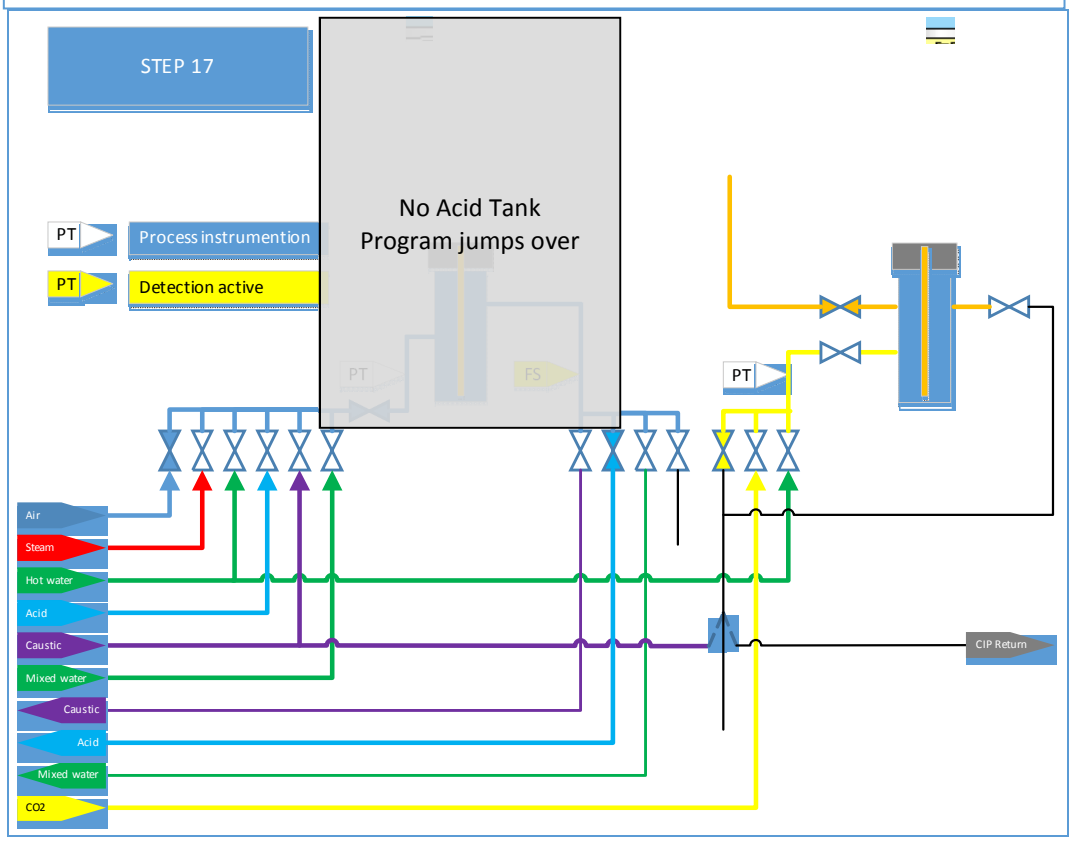
STEP 17
No Acid Tank
Program jumps over
PT
Process instrumention
PT
Detection active
PT
FS
PT
Air
Steam
Hot water
Acid
Caustic
Mixed water
Caustic
Acid
Mixed water
CO2
CIP Return

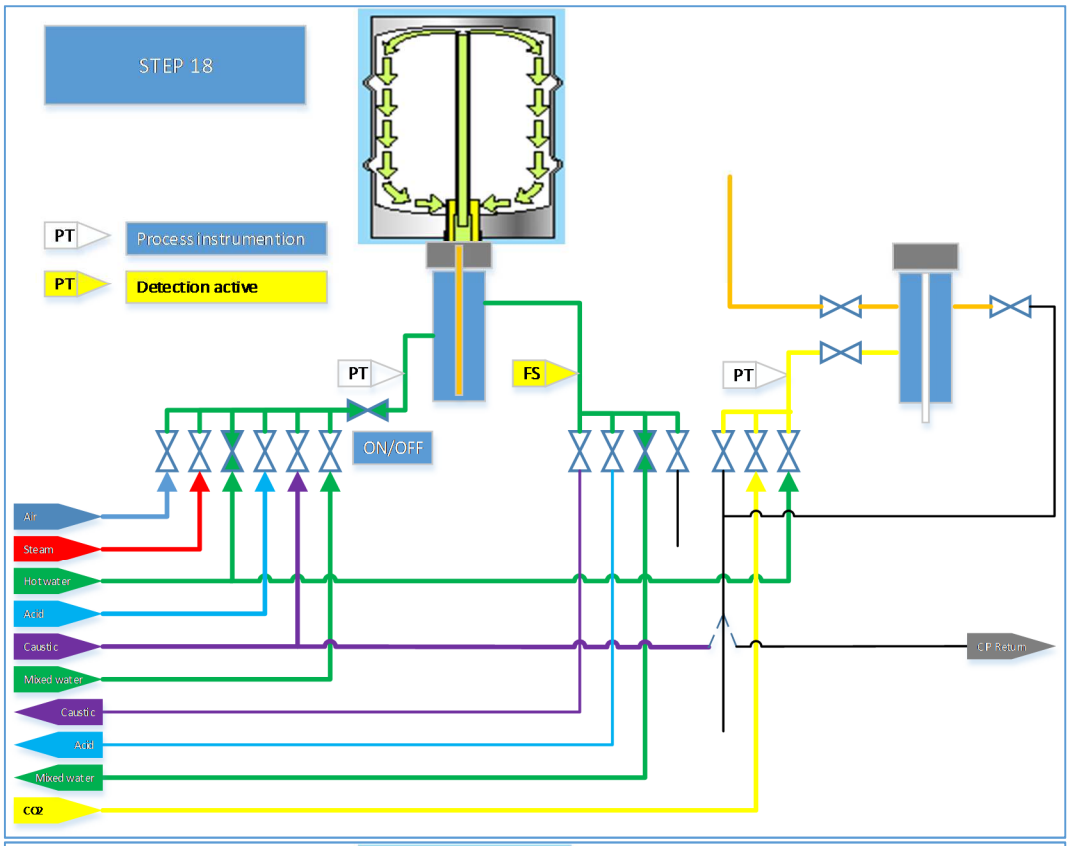
STEP 18
PT
Process instrumention
PT
Detection active
PT
FS
PT
ON/OFF
Air
Steam
Hot water
Acid
Caustic
Mixed water
Caustic
Acid
Mixed water
CO2
CP Return

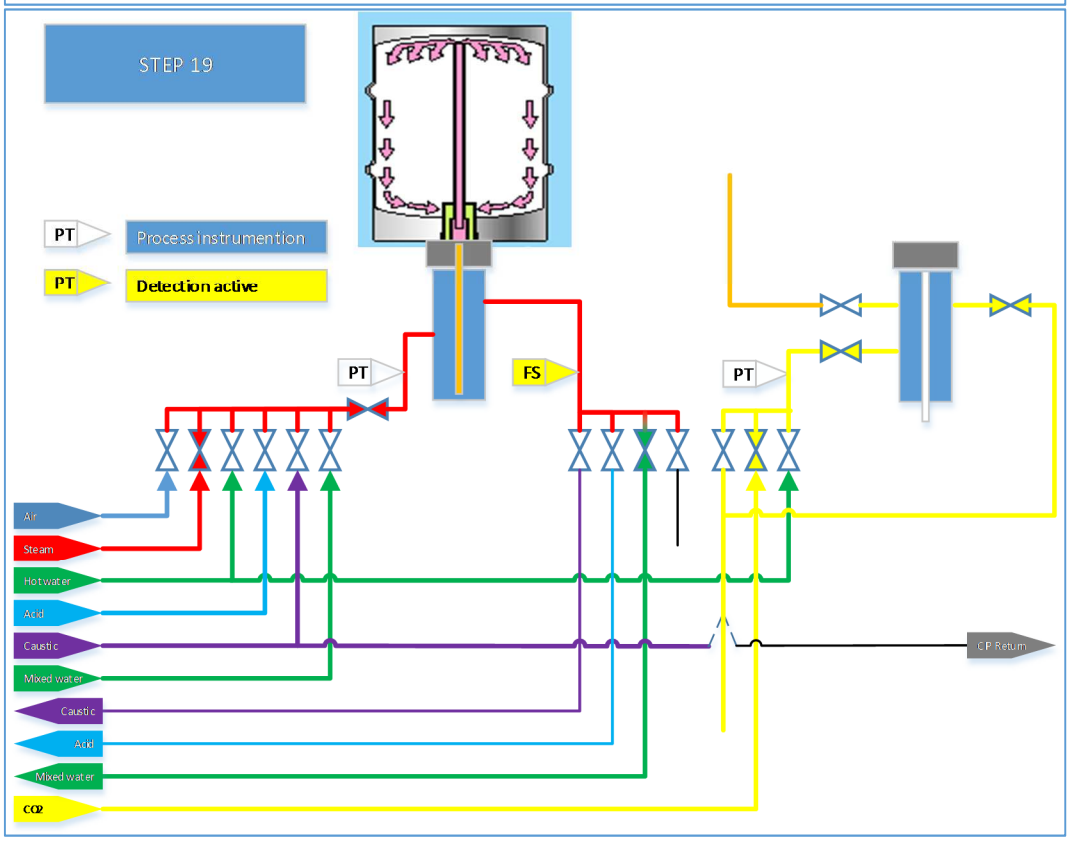
STEP 19
PT
Process instrumention
PT
Detection active
PT
FS
PT
Air
Steam
Hot water
Acid
Caustic
Mixed water
Caustic
Acid
Mixed water
CO2
CP Return

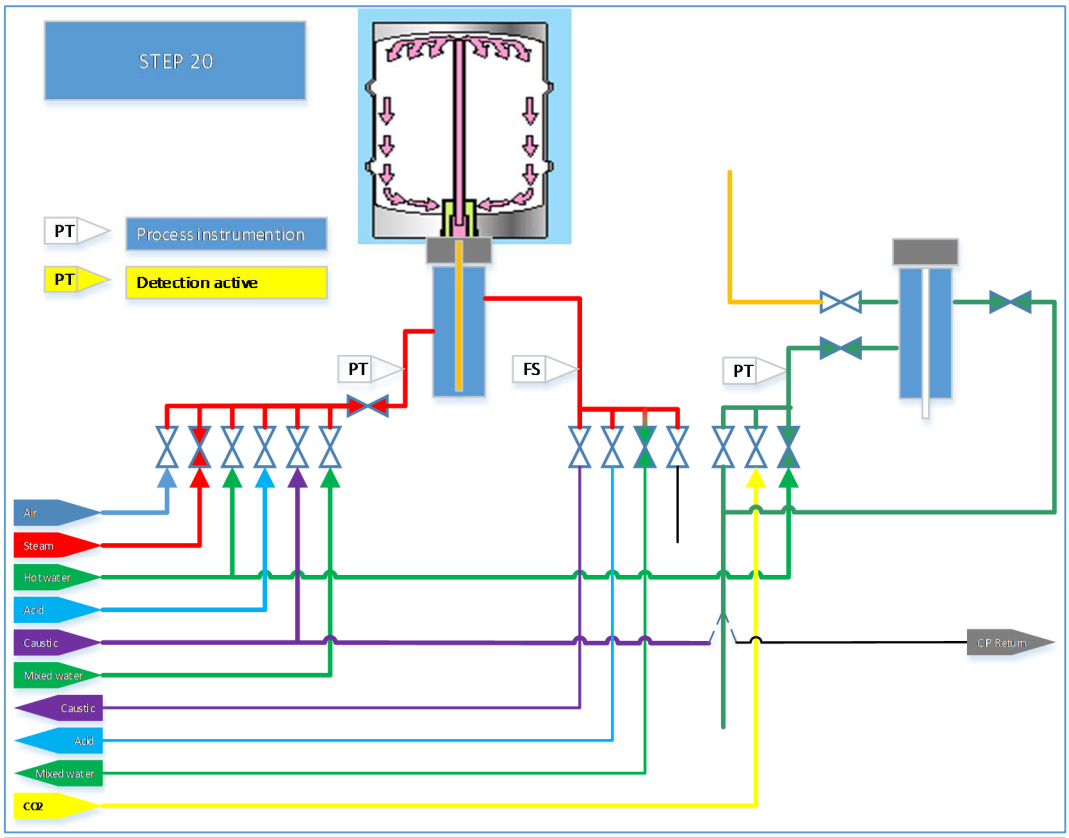
STEP 20
PT
Process instrumention
PT
Detection active
PT
FS
PT
Air
Steam
Hot water
Acid
Caustic
Mixed water
Caustic
Acid
Mixed water
CO2
CP Return

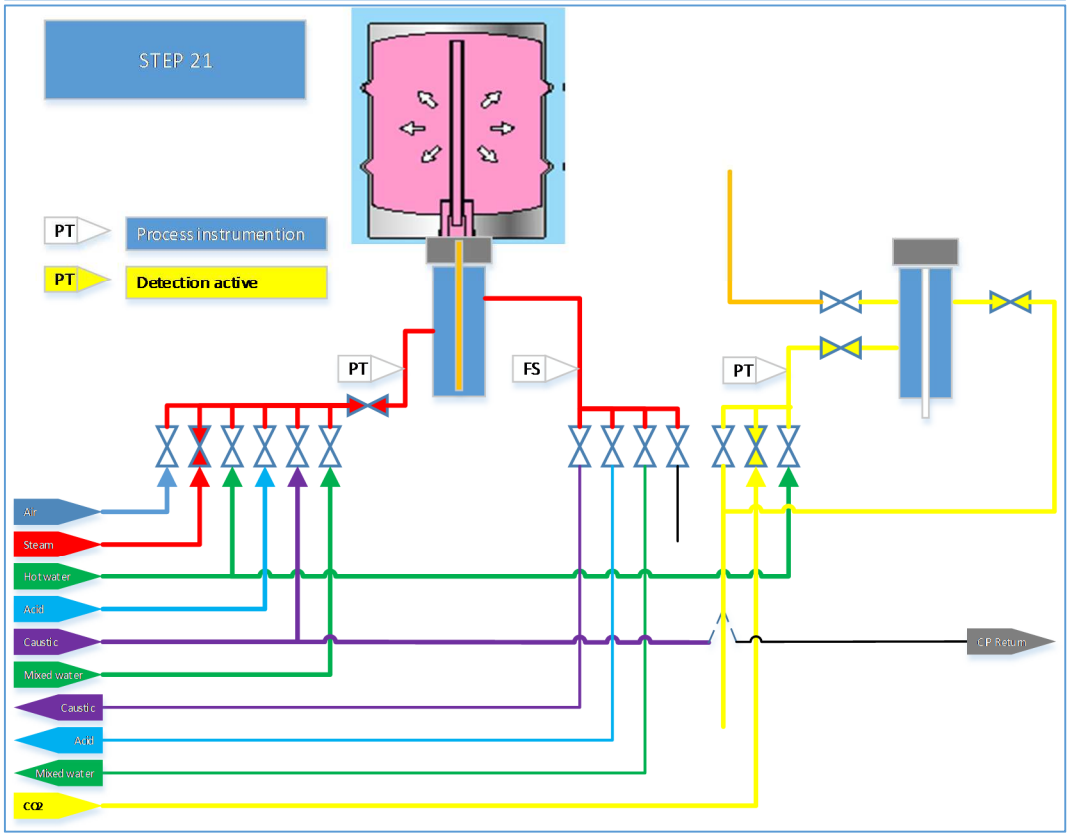
STEP 21
PT
Process instrumention
PT
Detection active
PT
FS
PT
Air
Steam
Hot water
Acid
Caustic
Mixed water
Caustic
Acid
Mixed water
CO2
CP Return

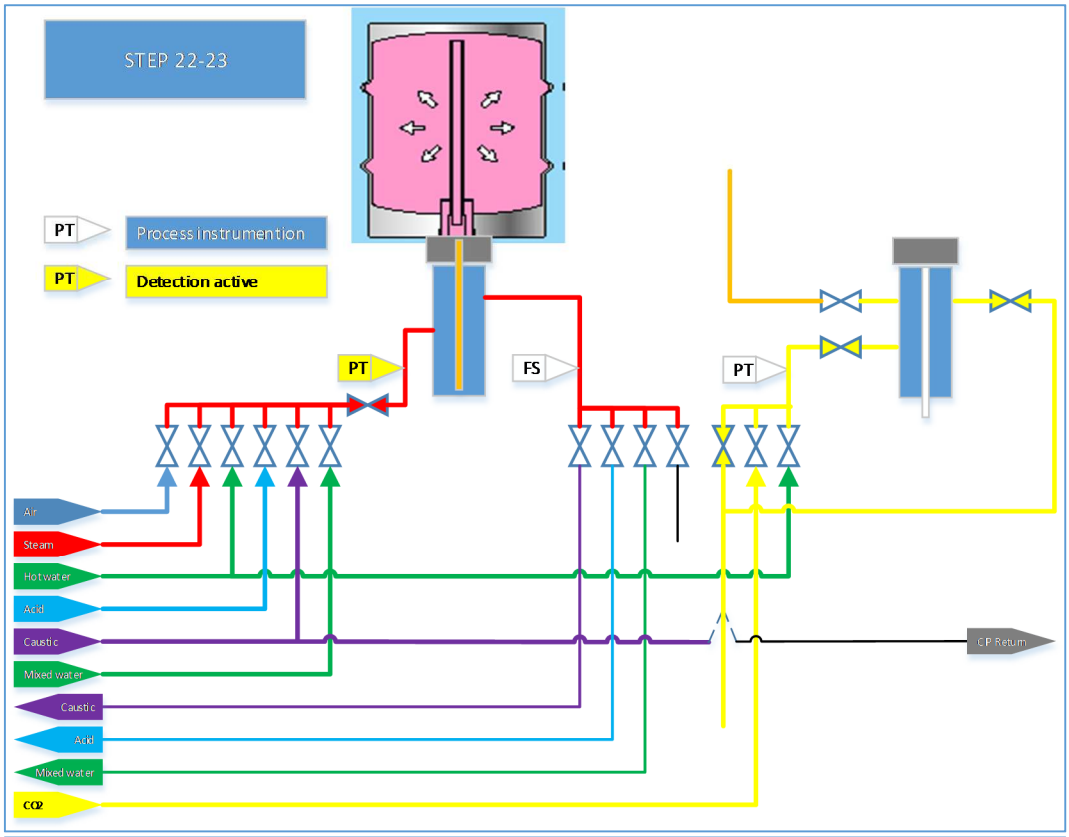
STEP 22-23
PT
Process instrumention
PT
Detection active
PT
FS
PT
Air
Steam
Hot water
Acid
Caustic
Mixed water
Caustic
Acid
Mixed water
CO2
CP Return

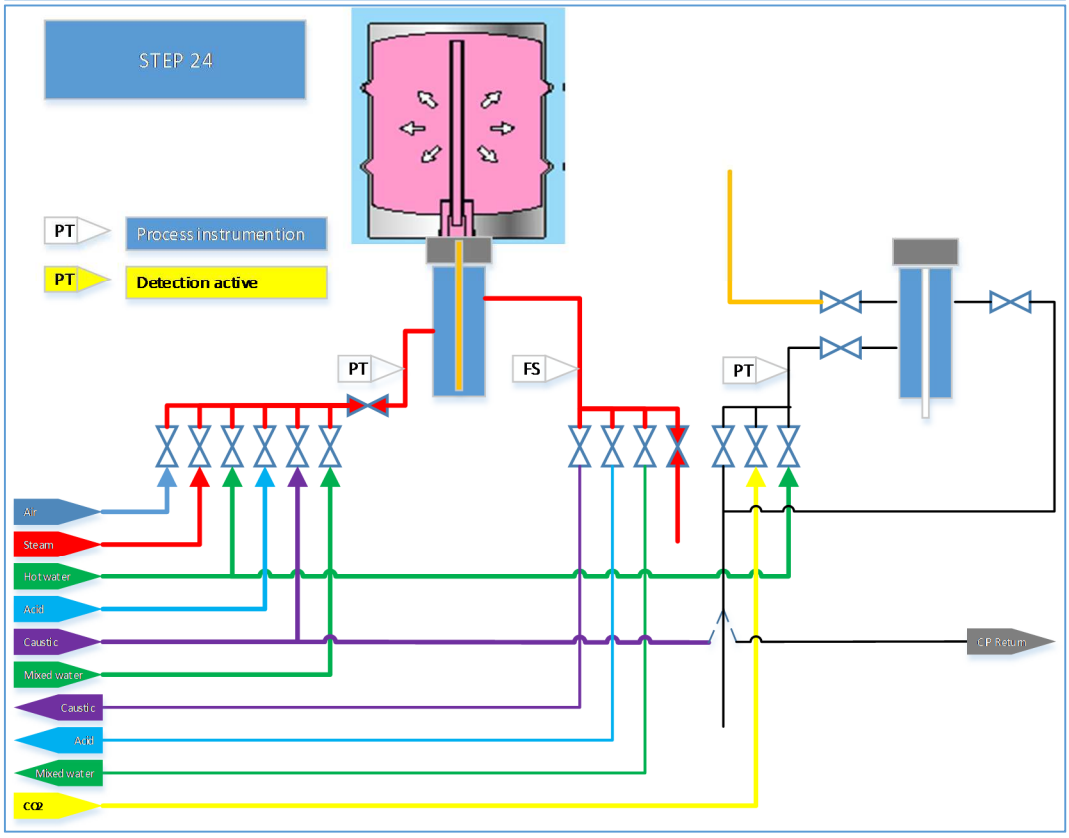
STEP 24
PT
Process instrumention
PT
Detection active
PT
FS
PT
Air
Steam
Hot water
Acid
Caustic
Mixed water
Caustic
Acid
Mixed water
CO2
CP Return

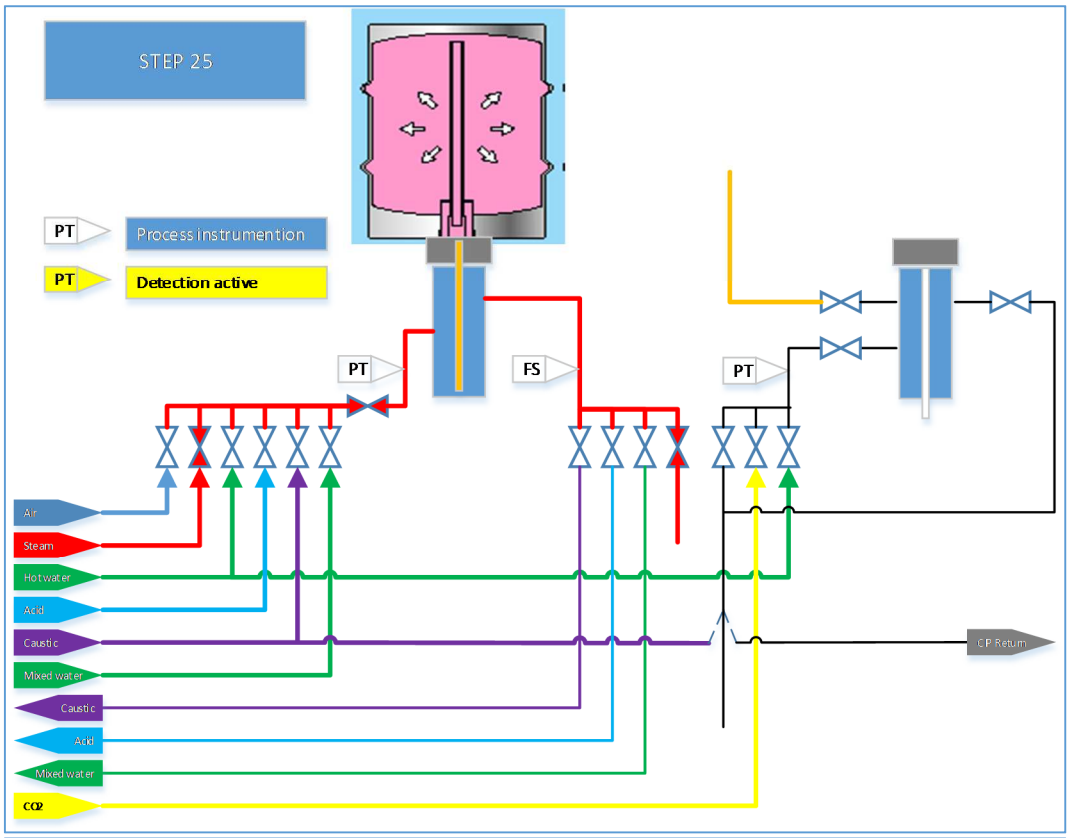
STEP 25
PT
Process instrumention
PT
Detection active
PT
FS
PT
Air
Steam
Hot water
Acid
Caustic
Mixed water
Caustic
Acid
Mixed water
CO2
CP Return

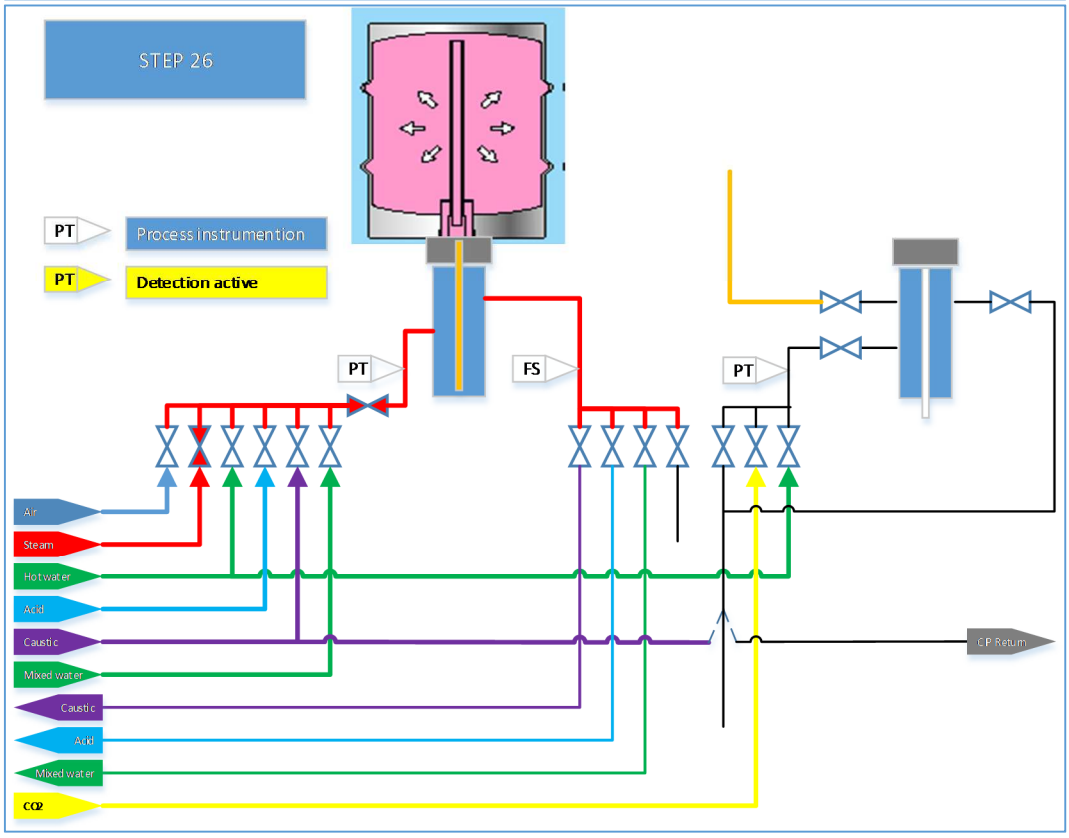
STEP 26
PT
Process instrumention
PT
Detection active
PT
FS
PT
Air
Steam
Hot water
Acid
Caustic
Mixed water
Caustic
Acid
Mixed water
CO2
CP Return

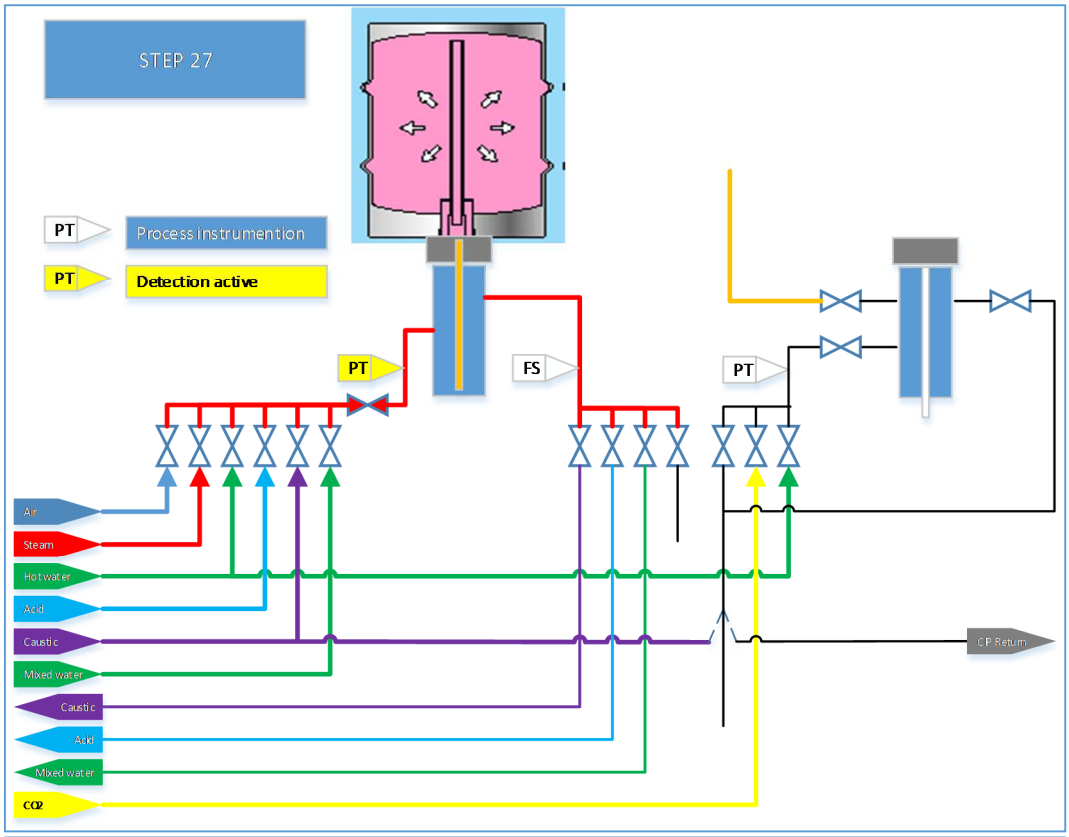
STEP 27
PT
Process instrumention
PT
Detection active
PT
FS
PT
Air
Steam
Hot water
Acid
Caustic
Mixed water
Caustic
Acid
Mixed water
CO2
CP Return

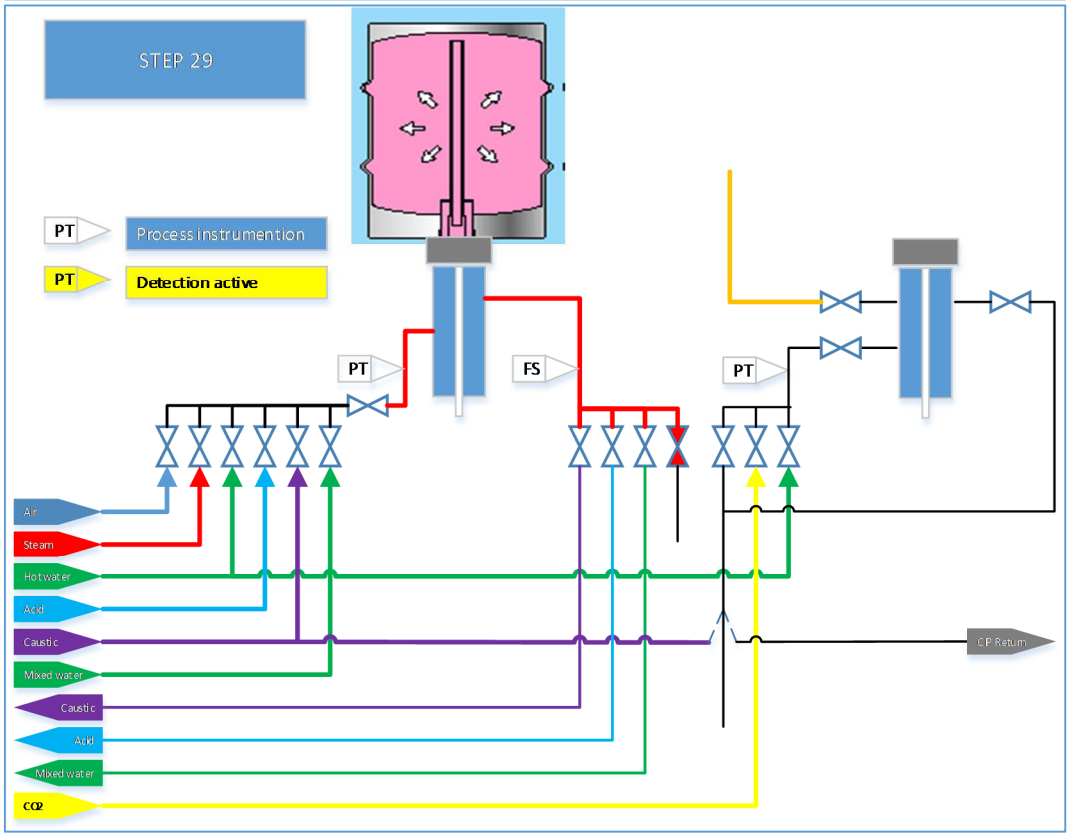
STEP 29
PT
Process instrumention
PT
Detection active
PT
FS
PT
Air
Steam
Hot water
Acid
Caustic
Mixed water
Caustic
Acid
Mixed water
CO2
CP Return

## 5.2. Process sequence list CIP

Provisions have been made in the machine design in order to conduct an internal or external CIP.
In order to proceed, the machine needs to be prepared for the CIP of choice by selecting the CIP route desired.

Internal CIP using hot water of internal detergent tank

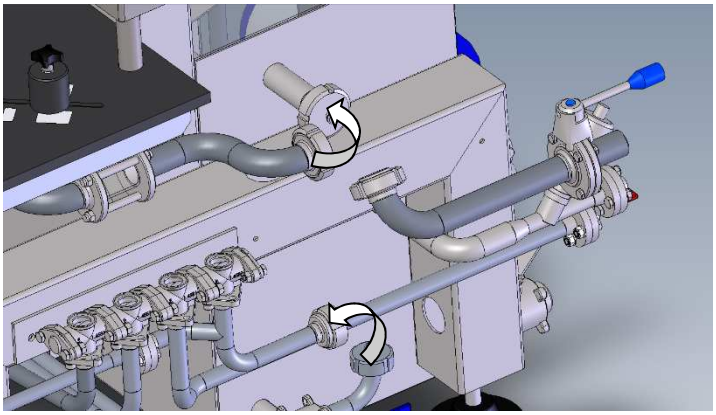

External CIP

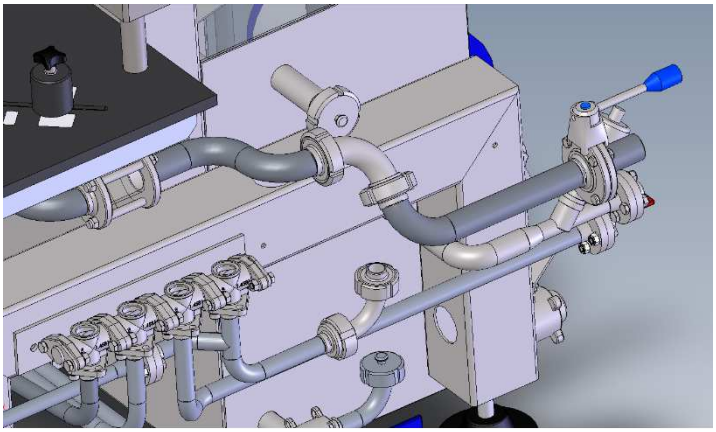

Once the desired connection is made, CIP mode can be selected on the HMI and the routine started.

| PROCESS STEPS | | | MEDIA VALVES | | | | | |
|---|---|---|---|---|---|---|---|---|
| STEP | Description | T [s] | Fob FH-1FOB | 1CO2 FH-1CO2 | Hot Water FH-1HW | Low flow FH-1LF | Drain FH-2Dr | Product FH-PHF |
| **CIP 1: HOT WATER** | | | | | | | | |
| 1 | CIP (hot water): Pressurise head | 0,5 | | X | | X | | |
| 2 | CIP (hot water): Head leak check / delay | 1 | | | | | | |
| 3 | CIP (hot water): Prepare hot water tank | | | | | | | |
| 10 | CIP (hot water): Open CIP route 1 (15s On / Off) | | 0/1* | | X | X | X | |
| | CIP (hot water): Open CIP route 2 (15s Off / On) | | | | | | | X |
| 20 | CIP (hot water): Stop pump and disconnect | | | | | | | |
| 21 | CIP (hot water): Blow out head (step 1) | 3 | | X | | X | X | |
| 22 | CIP (hot water): Blow out head (step 2) | 3 | | X | | X | | X |
| 23 | CIP (hot water): Blow out head (step 3) | 1 | X | X | | X | | |
| 24 | CIP (hot water): Depressurise head | 2 | X | | | X | X | |
| 25 | CIP (hot water): End of process | | | | | | | |

| STEP | Description | T [s] | Fob FH-1FOB | 1CO2 FH-1CO2 | Hot Water FH-1HW | Low flow FH-1LF | Drain FH-2Dr | Product FH-PHF |
|---|---|---|---|---|---|---|---|---|
| **CIP 2: DETERGENT** | | | | | | | | |
| 1 | CIP (Caustic): Pressurise head (after popup) | 0,5 | | X | | X | | |
| 2 | CIP (Caustic): Head leak check / delay | 1 | | | | | | |
| 3 | CIP (Caustic): Prepare caustic tank | | | | | | | |
| 10 | CIP (Caustic): Open CIP route | | X | | | X | X | X |
| 20 | CIP (Caustic): Stop pump and disconnect (close hand valve) | | | | | | | |
| 21 | CIP (Caustic): Blow out head | 5 | X | X | | X | X | X |
| 24 | CIP (Caustic): Depressurise head | 2 | X | | | X | X | X |
| 25 | CIP (Caustic): End of process | | | | | | | |

| STEP | Description | T [s] | Fob FH-1FOB | 1CO2 FH-1CO2 | Hot Water FH-1HW | Low flow FH-1LF | Drain FH-2Dr | Product FH-PHF |
|---|---|---|---|---|---|---|---|---|
| **CIP 3: EXTERN** | | | | | | | | |
| 1 | CIP (Extern): Pressurise head | 0,5 | | X | | X | | |
| 2 | CIP (Extern): Head leak check / delay | 1 | | | | | | |
| 10 | CIP (Extern): Open CIP route | | X | | | X | X | X |
| 20 | CIP (Extern): Wash Head | | | | X | X | X | |
| 21 | CIP (Extern): Blow out head (step 1) | 1 | X | X | | X | | |
| 22 | CIP (Extern): Blow out head (step 2) | 4 | | X | | X | X | |
| 24 | CIP (Extern): Depressurise head | 2 | X | | | X | X | |
| 25 | CIP (Extern): End of process | | | | | | | |

| SUMMARY | | |
|---|---|---|
| X | = | Active |
| 0/1 | = | Off / On |
| 0/1* | = | 50s Off / 2 On |
| | = | Inactive |

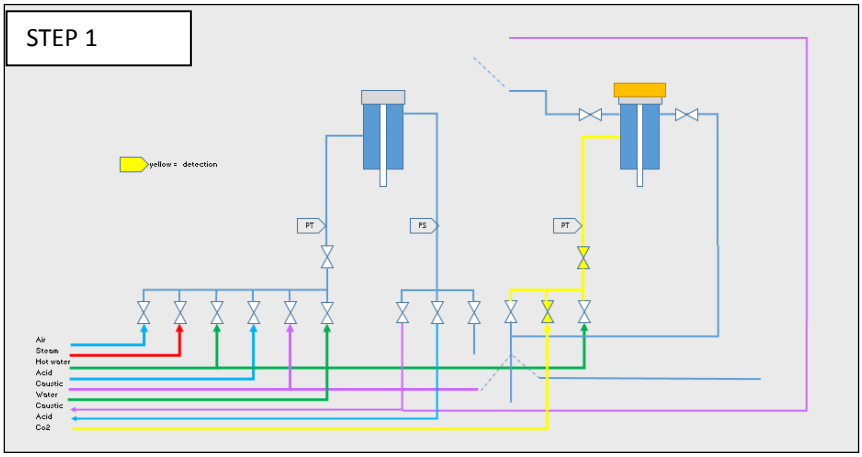
STEP 1
yellow = detection
PT
FS
PT
Air
Steam
Hot water
Acid
Caustic
Water
Caustic
Acid
Co2

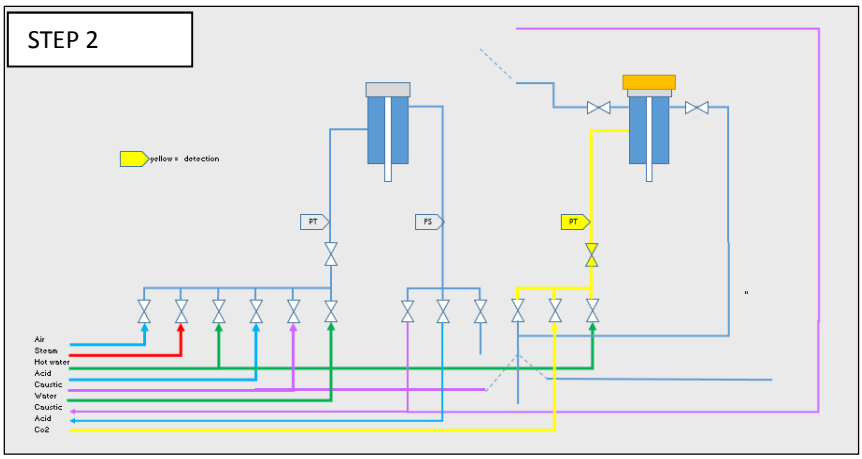
STEP 2
yellow = detection
PT
FS
PT
Air
Steam
Hot water
Acid
Caustic
Water
Caustic
Acid
Co2

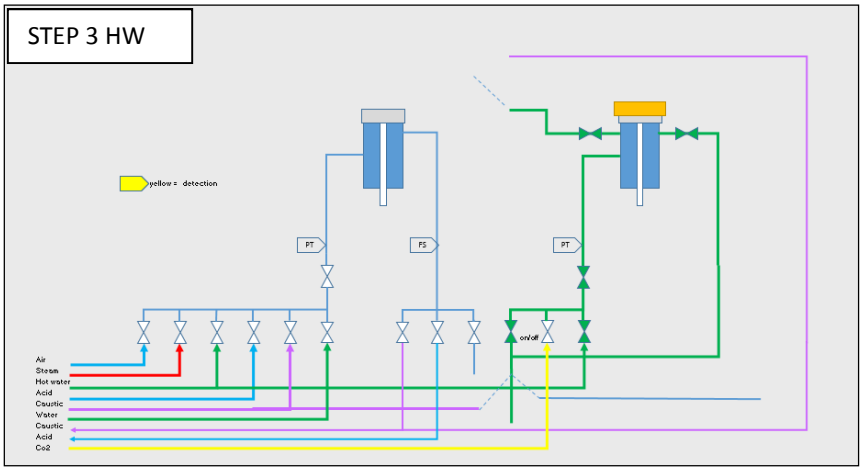
STEP 3 HW
yellow = detection
PT
FS
PT
on/off
Air
Steam
Hot water
Acid
Caustic
Water
Caustic
Acid
Co2

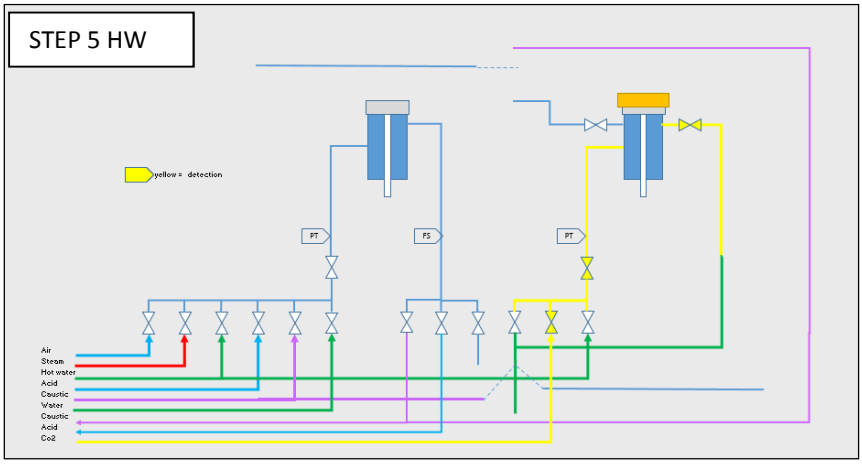
STEP 5 HW
yellow = detection
PT
FS
PT
Air
Steam
Hot water
Acid
Caustic
Water
Caustic
Acid
Co2

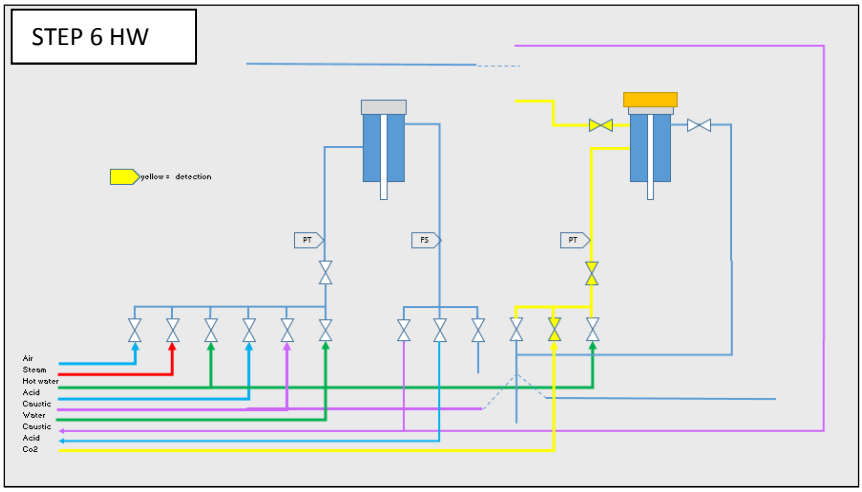
STEP 6 HW
yellow = detection
PT
FS
PT
Air
Steam
Hot water
Acid
Caustic
Water
Caustic
Acid
Co2

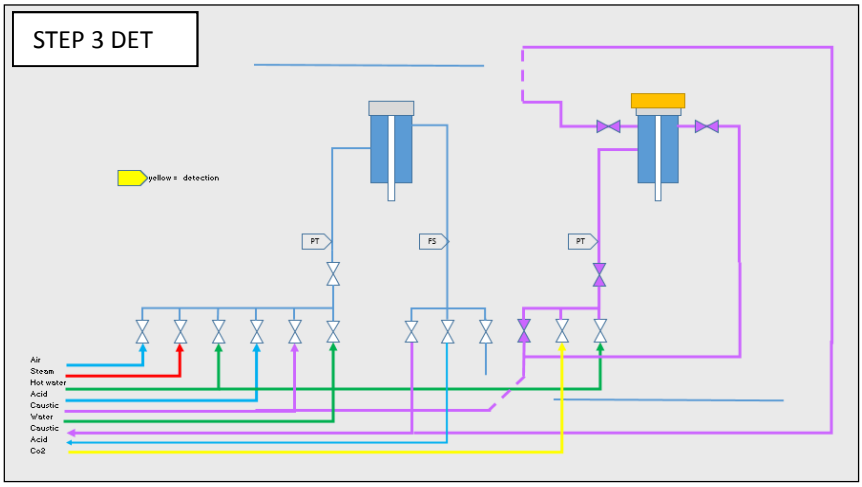
STEP 3 DET
yellow = detection
PT
FS
PT
Air
Steam
Hot water
Acid
Caustic
Water
Caustic
Acid
Co2

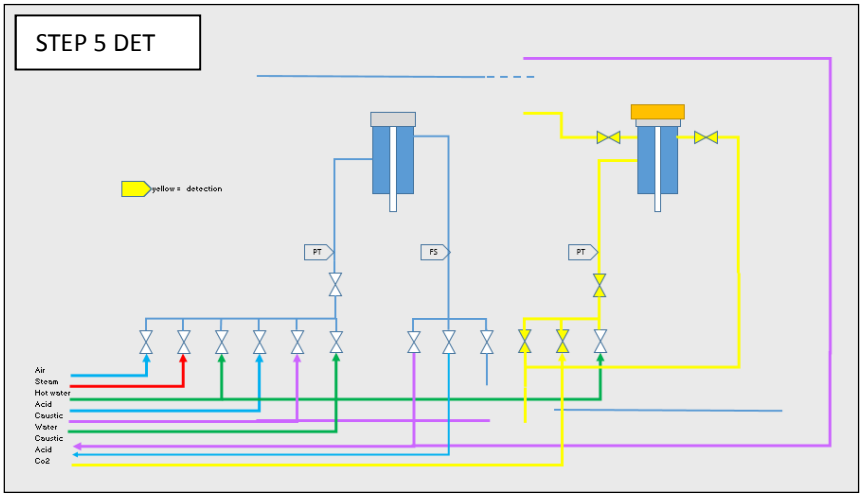
STEP 5 DET
yellow = detection
PT
FS
PT
Air
Steam
Hot water
Acid
Caustic
Water
Caustic
Acid
Co2

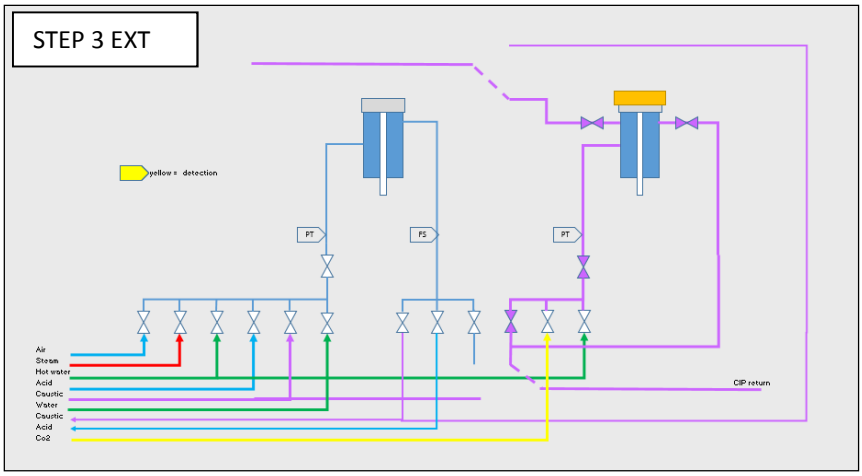
STEP 3 EXT
yellow = detection
PT
FS
PT
Air
Steam
Hot water
Acid
Caustic
Water
Caustic
Acid
Co2
CIP return

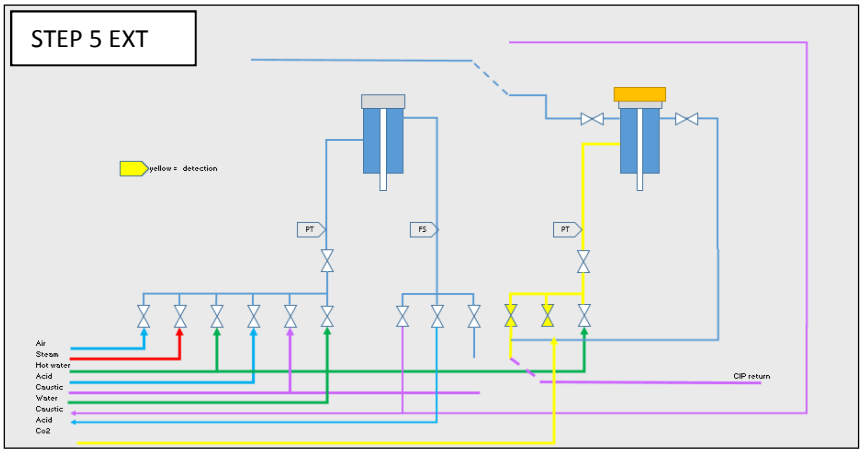
STEP 5 EXT
yellow = detection
PT
FS
PT
Air
Steam
Hot water
Acid
Caustic
Water
Caustic
Acid
Co2
CIP return

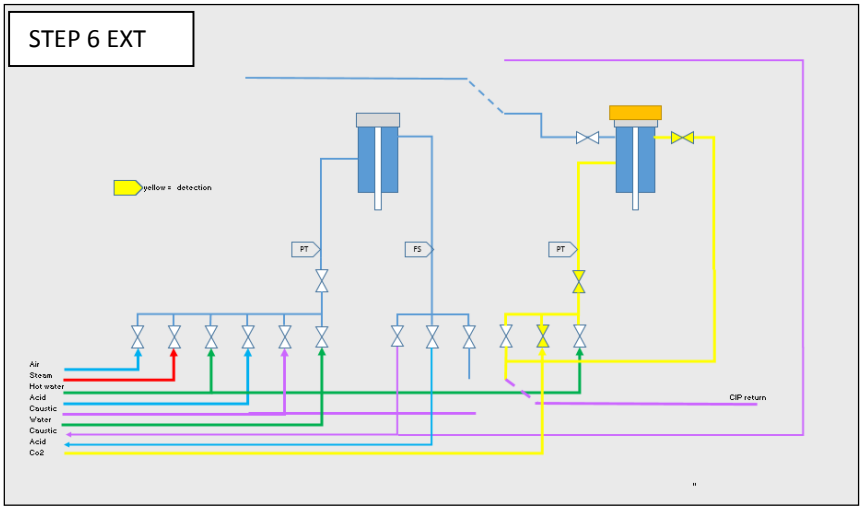
STEP 6 EXT
yellow = detection
PT
FS
PT
Air
Steam
Hot water
Acid
Caustic
Water
Caustic
Acid
Co2
CIP return

## 5.3. Instrumentation

### 5.3.1. Pressure transducer

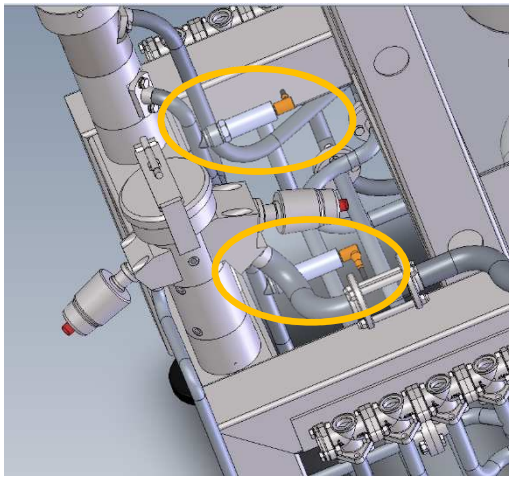

On each process head, a pressure transducer allows for pressure checks in order to validate the process.

### 5.3.2. Fluid switch

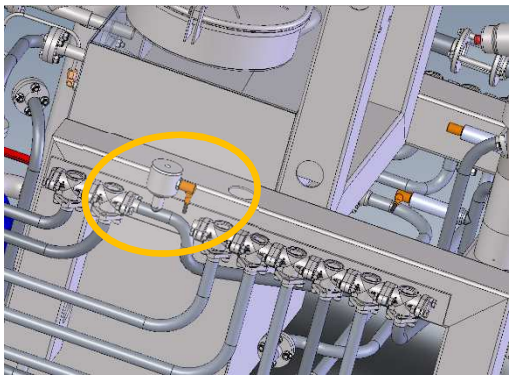

A fluid switch detects the presence of fluid and allows for process control during wash cycles in order to determine if the wash cycle has been effective and the keg is emptied during purge cycles.

### 5.3.3. Beer gauge – transmitter and receiver

The beer gauge calculates the closing time of the beer valve on the fill head based on the desired filling volume and the current filling flow rate. As a result, it is possible to fill the barrel without losing beer.

The beer gauge consists of two parts:

- A transmitter positioned in the beer pipe
- A receiver mounted on the frame

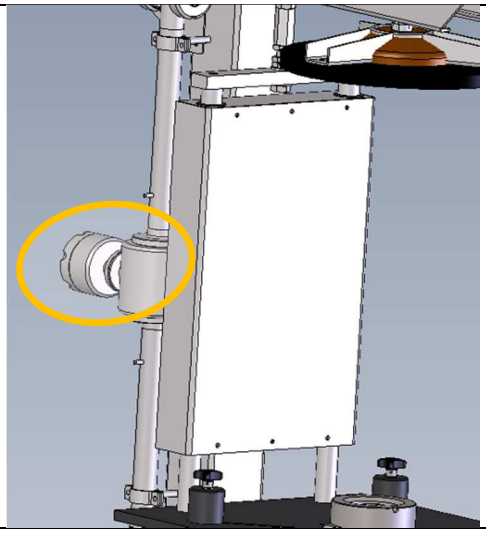


The beer gauge is set to the required filling volume in the PLC. The beer gauge follows the current volume once the filling process starts. The beer gauge determines the moment at which the beer valve must close based on the filling volume of the last 4 filling sequences and the current flow rate.

## 6. Filling principle applied

A filled keg contains a large volume of carbonated beer, and a small volume of CO2. CO2 under pressure ensures that there is no oxygen present and prevents de-carbonation of the beer, so the shelf life of the beer is not impeded. For this reason, the vessel is placed under CO2 pressure for the filling.

During the filling, the CO2 causes a back pressure on the inflowing beer that causes, without evacuation, a gradually speed filling fall due to the compression of the CO2. Only a controlled evacuation of the gas makes it possible to maintain a certain degree of filling speed and sufficient CO2 pressure on the beer.
In other words, controlling the differential pressure between the CO2 and inflowing beer, indirectly determines the filling speed. Controlling the differential pressure is inherent in the filling of beer and should be done in a way that both the speed of the filling and the quality of the beer are acceptable.

Below is a schematic representation of this principle:

- The beer pressure is P1 and the pressure of the CO2 in the keg is P2.
- At T0 the beer valve opens and a filling speed is set proportional to the differential pressure P1-P2. As a result P2 will increase due to compression by the inflowing beer.
- At T1, the FOB valve is opened and CO2 can evacuate through the BPRV (back pressure relief valve). A filling speed is set which is proportional to a differential pressure whereby P2 will be determined by the back pressure setting of the BPRV.
- At T3 is filling stopped by the beer meter.

Further intermediate filling speeds are possible by using a two-stage beer valve active at start and end of the filling process.

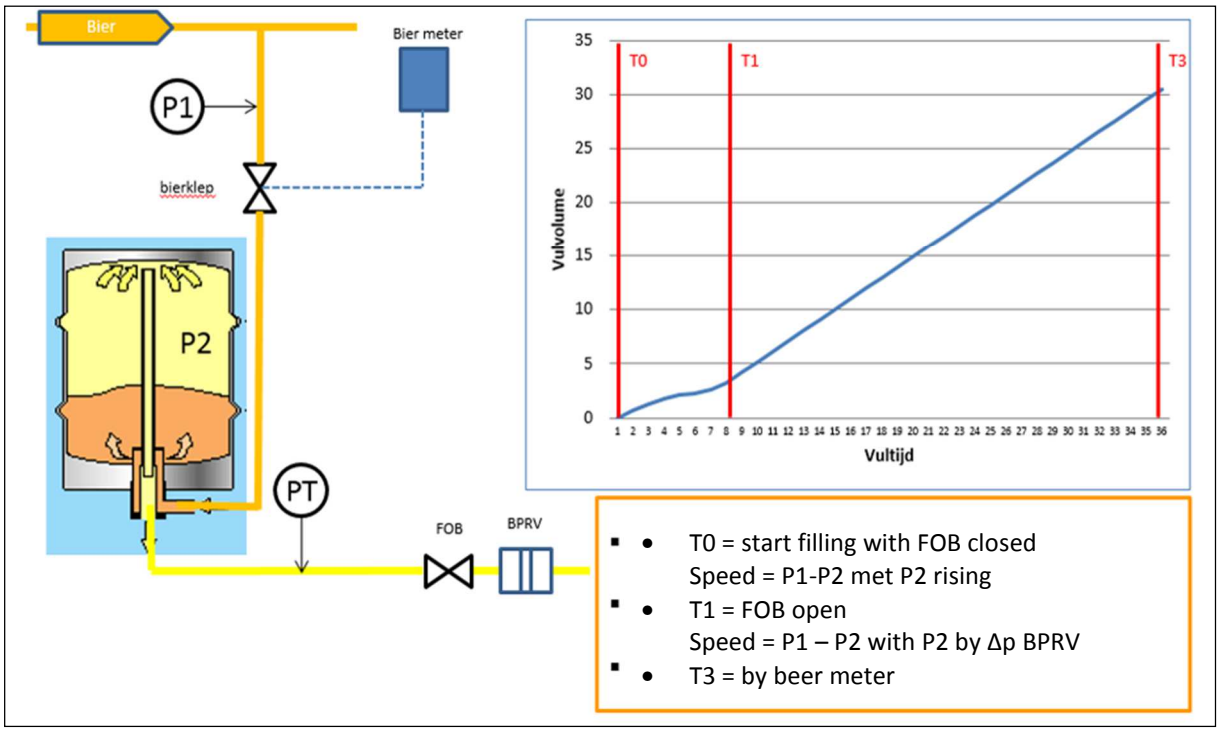


Previous shows that the pressure settings for CO2 and BPRV must be in function of the beer pressure.

- CO2 beer pressure- 0,5 bar
- BPRV beer pressure- 0,5 bar

## 6.1. Controls and HMI

### 6.1.1. Operation procedure

Use your finger or a specially developed pen for touchscreens to operate the screen!
Pending the configuration of the ordered machine, some of the screens shown below can be unavailable.

### 6.1.2. Password

Because some settings are crucial for keg inspection, some screens can be protected by password. Only authorized personal can access these screens using the appropriate login and password, to alter certain parameters.
By pressing a protected parameter, a login window pops up, requesting for the correct prompt. An on-screen keyboard is displayed automatically when an input cell is activated.

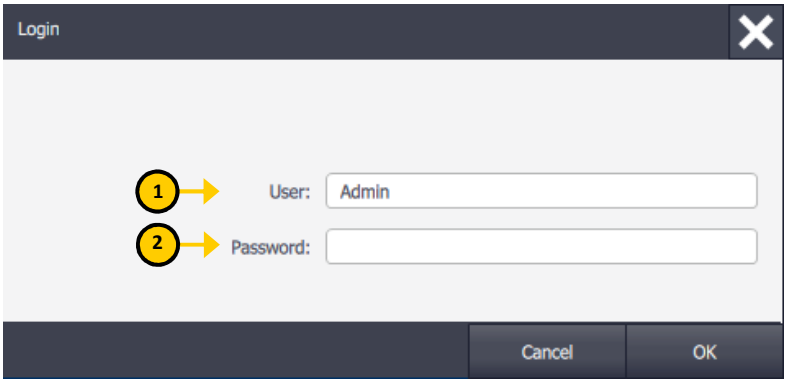


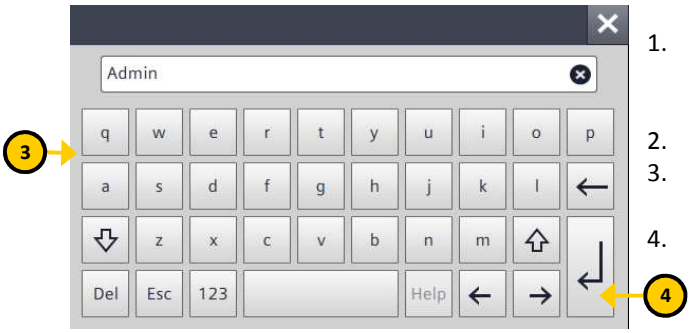


1. User: Defines the level of access. When logged in correctly, a user can access on individual level and all sub-levels.
2. Password: Each user has its own specific password.
3. Soft-keyboard: Use to enter alpha-numeric data. (User and Password)
4. Enter-key: MUST be pressed after each line input.

### 6.1.3. Start up and Schreen navigation

Power-up is completed when the Lambrechts home screen is displayed.


Touching the logo in the center of the screen brings up the general selection menu and the following options are displayed:

| | |
|---|---|
| 1. Set Up | access to selection of barrels, operating mode and choice of filling control |
| 2. Wash Guard | access to overview of the presence of the different media in the kegs |
| 3. Wash Time | access to overview of the washing times |
| 4. Wash head | access to visual presentation of the wash head with valves |
| 5. Process | access to visual presentation of both wash head as filling head |
| 6. Filling head | access to visual presentation of the filling head with valves |
| 7. Rejects WH | access to overview of rejects during the washing process |
| 8. Faults | access to overview of alarms/errors |
| 9. Rejects FH | access to overview of rejects during the filling process |
| 10. Tanks | access to visual presentation of the caustic, acid, hot water and mixed water tank |

## 6.1.4. SET UP SCREEN

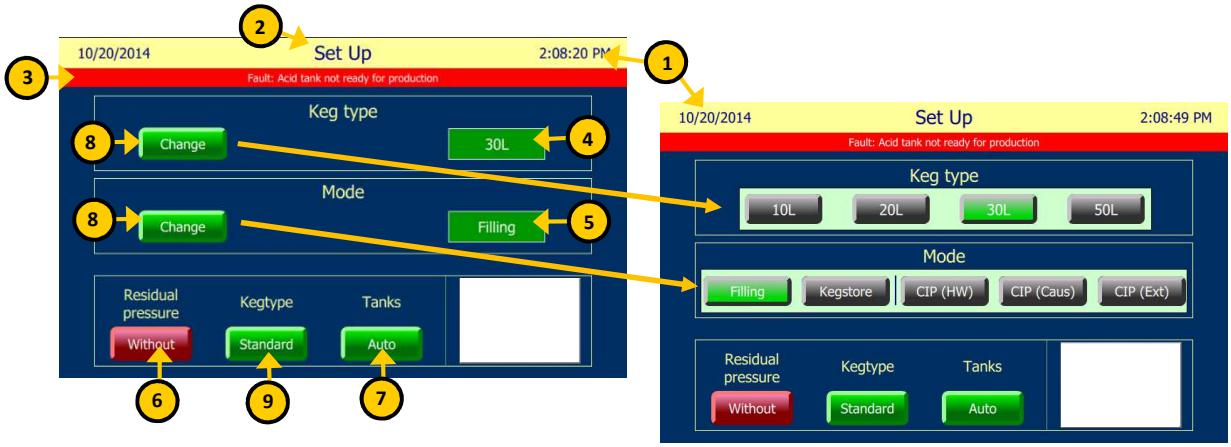


1. Date and time.
2. Title of the active screen display, also push button for “screen choice” page.
3. Installation status + last error message.
4. Selected keg type. “Change” button only pops up when all conditions are valid. list of all possible keg types is shown and your choice can be made.
5. Selected mode (Fill or Cip/Fob). The “Change” button is only available when all change conditions are valid. a list of all possible modes is shown and anew choice can be made.
6. Opportunity to clean kegs without checking residual pressure. Be aware of possibly filling kegs with leaking feeder plunger.
7. Press button to switch tanks (caustic, acid, hot water and mixed water) in automatic or manual mode.
8. Press button to change the mode (filling and/or 3 CIP-modes)and/or the keg type (10L/20L/30L/50L).
9. Press button to, if the machine equipped for it, switch settings for standard kegs into one-way kegs.

## 6.1.5. PROCESS

Washing and filling head are displayed as they are actually effective. A keg is shown only while one is actually in position. Each head has a pressure sensor.
Each valve indicates its active state individually so media flow can be monitored on each head separately while cleaning or filling kegs. (Indicator on solenoid valves colors green when active).
Illustration below shows the process for both the washing and filling head. Further on, in-depth details of both heads will be provided.

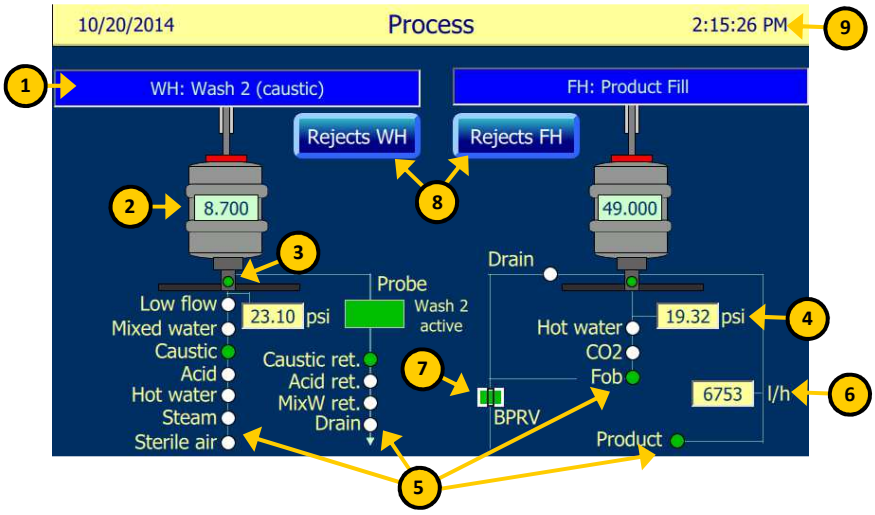


1 - This cell shows the active process for each head. On any kind of error this cell will color RED and the error message is displayed. After a process is finished this cell colors green and displays “Process OK”.
2 - Process time left for the active step is displayed in each keg, illustrated on the display.
3 - Indicates a correct disclosure of the keg. The push-on adapter is positioned correctly in respect to the proximity switch.
4 - Actual pressure indication
5 - Visual presentation of the valves
6 - Current flow
7 - Back pressure relief valve
8 - Push buttons to pop up “Rejects” Page for the respective head (see chapter rejects).
9 - Title of the active screen display, also push button for “screen choice” page.

### 6.1.5.1. WASHING CYCLE

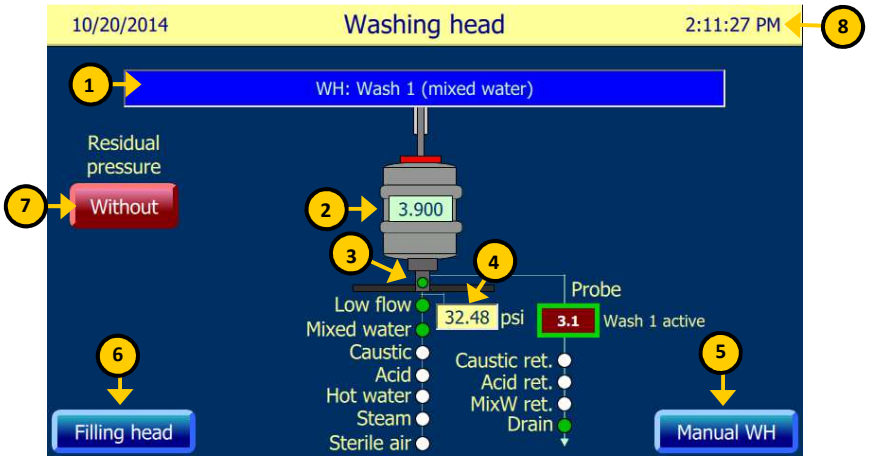

1 - This cell shows the active process for each head. On any kind of error this cell will color RED and the error message is displayed. After process is finished this cell colors green and displays “Process OK”.
2 - Process time left for the active step is displayed in each keg, illustrated on the display.
3 - Indicates a correct disclosure of the keg. The push-on adapter is positioned correctly in respect to the proximity switch.
4 - Actual pressure indication
5 - Push button to pop up “Manual”-Page for the respective head (see next chapter).
6 - Push button to toggle between washing and filling head.
7 - Opportunity to clean kegs without checking residual pressure. Be aware of possibly filling kegs with leaking feeder plunger.
8 - Title of the active screen display, also push button for “screen choice” page.

### 6.1.5.2. FILLING CYCLE

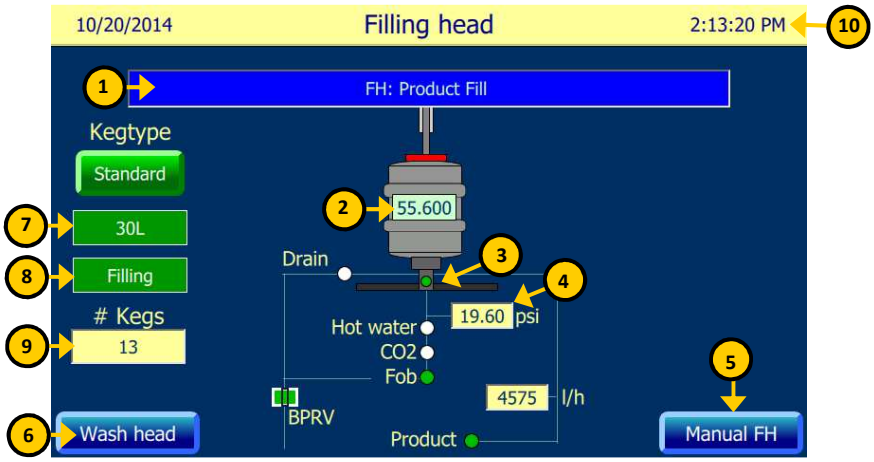


1 - This cell shows the active process for each head. On any kind of error this cell will color RED and the error message is displayed. After process is finished this cell colors green and displays “Process OK”.
2 - Process time left for the active step is displayed in each keg, illustrated on the display.
3 - Indicates a correct disclosure of the keg. The push-on adapter is positioned correctly in respect to the proximity switch.
4 - Actual pressure indication.
5 - Push button to pop up “Manual”-Page for the respective head (see next chapter).
6 - Push button to toggle between washing and filling head.
7 - Selected keg type
8 - Selected mode (filling or Cip).
9 - Number of correctly filled kegs since the last reset.
10 - Title of the active screen display, also push button for “screen choice” page.

### 6.1.5.3. MANUAL CONTROLS

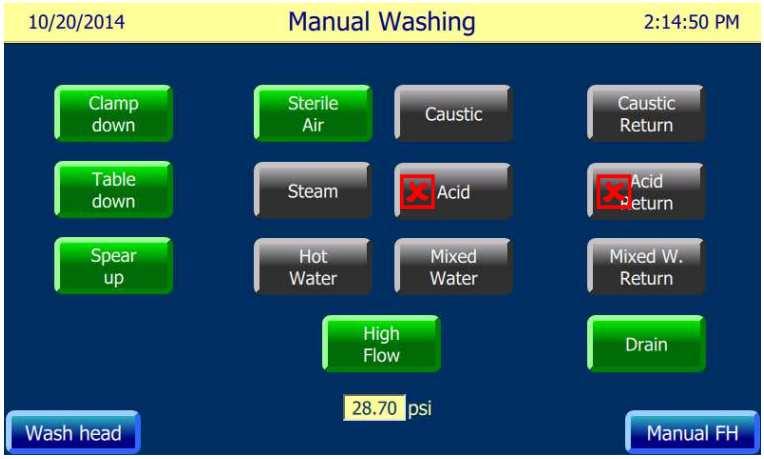


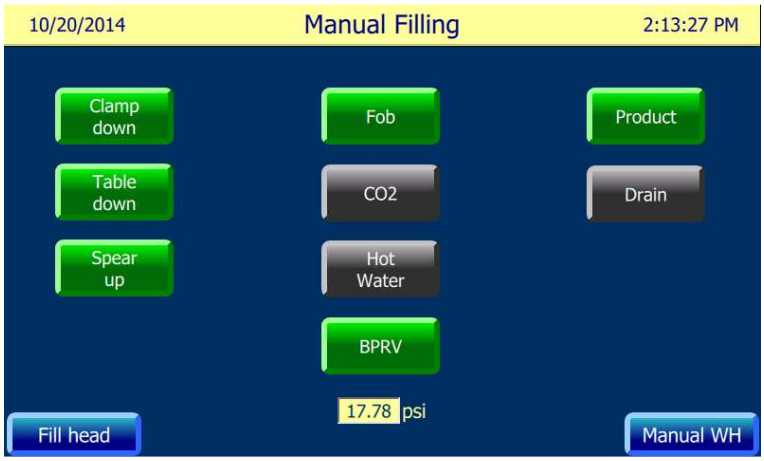


The manual selection screen allows for manual operation of all actuators present on washing and filling head. This function is available in order to support troubleshooting or check maintenance work.

Caution! Make sure that the washing head and filling head are closed with a CIP CAP before opening any valves to prevent the liquid squirting out of the washing head or filling head!

Push the title ribbon to return to the screen choice.

## 6.1.6. REJECTS - WASHING / FILLING / CIP

Error counts are logged for each head. These screens allow you to easily trace causes for rejects on individual heads. i.e.: When error “keg not open” occurs frequently on the washing head, then you might have to check the setting of the proximity switch and its positioning in respect to the collar on top of the adapter.
A list of errors and solutions can be found in chapter: “Table cause and solutions”.

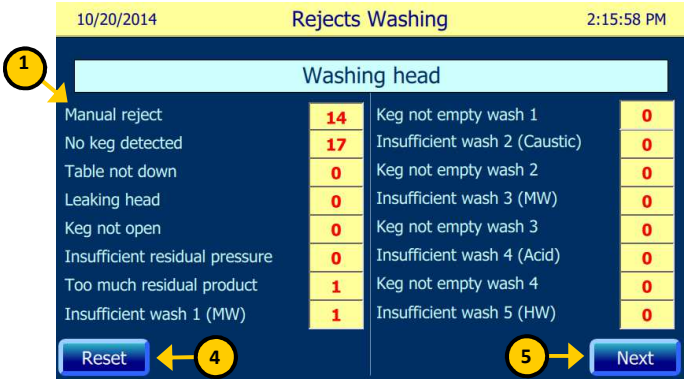


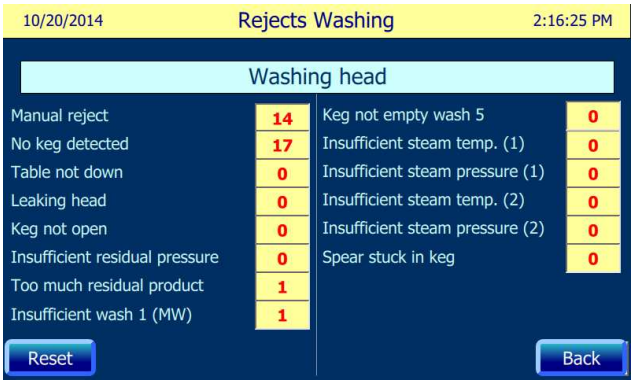


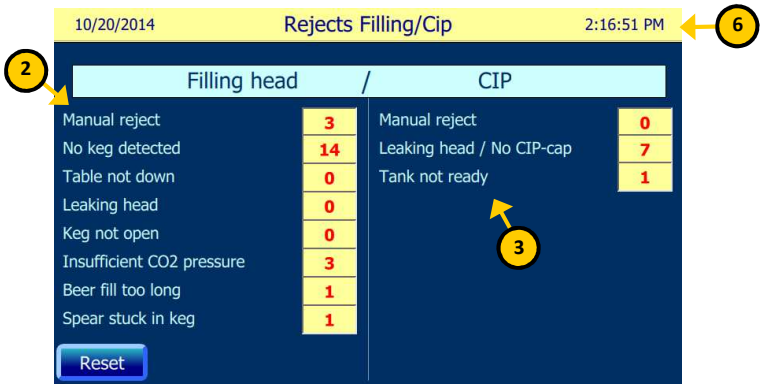


1. List of all possible errors on the washing head and number of occurrence on the right.
2. List of all possible errors on the filling head and number of occurrence on the right.
3. List of all possible errors during CIP and number of occurrence on the right.
4. Push button to reset the respective error counters at start of a new shift or a new product.
5. Push button to go to the next rejects screen for washing
6. Title of the active screen display, also push button for “screen choice” page.

## 6.1.7. TANKS

This screen monitors the condition of the two tanks. Temperature of each tank must fit the predefined limits before the washing process can start.


1 - Steam- and water valve indicators. activated valves colors green.
2 - Hi/Lo Level sensors. When the low level indication fails, the indicator blinks red and the pump is stopped automatically. Until the high level is reached, this indicator colors orange and the tank is filled.
3 - The temperature setpoint of the tank. By pushing the cell, a keyboard will appear and a new value can be entered.
4 - The conductivity setpoint of the tank. By pushing the cell, a keyboard will appear and a new value can be entered.
5 - De actual temperature for the tank displayed.
6 - De actual conductivity for the tank displayed.
7 - The pump of the tank. The colored bar shows the actual situation: gray = inactive, green = active.
8 - Toggles the display between the tanks.
9 - Push button with the same function as the one on the Set Up page: activate or deactivate the automatic mode of the tanks.
10 - Title of the active screen display, also push button for “screen choice” page.

## 6.1.8. WASH GUARD

10/20/2014 — Wash guards — 2:10:05 PM

| Wash guards (time x 100ms) | Wash 1 (mixed water) | Wash 2 (caustic) | Wash 3 (mixed water) | Wash 4 (acid) | Wash 5 (hot water) |
|---|---|---|---|---|---|
| Minimum time: | 4.0 | 13.0 | 1.5 | 13.0 | 13.0 |
| Measurement 1: | 7.5 | 16.6 | 4.1 | 15.8 | 0.0 |
| Measurement 2: | 0.0 | 16.8 | 0.0 | 17.7 | 16.8 |
| Measurement 3: | 0.0 | 17.0 | 5.0 | 17.8 | 17.4 |
| Measurement 4: | 10.0 | 17.0 | 4.9 | 17.9 | 17.0 |
| Measurement 5: | 0.0 | 17.0 | 5.2 | 17.8 | 0.0 |
| Reset | Reset | Reset | Reset | Reset | Reset |

| Wash presets (time x 100ms) | Wash 1 (mixed water) | Wash 2 (caustic) | Wash 3 (mixed water) | Wash 4 (acid) | Wash 5 (hot water) |
|---|---|---|---|---|---|
| 10L: | 4.0 | 13.0 | 1.5 | 13.0 | 13.0 |
| 20L: | 4.0 | 13.0 | 1.5 | 13.0 | 13.0 |
| 30L: | 4.0 | 13.0 | 1.5 | 13.0 | 13.0 |
| 50L: | 4.0 | 13.0 | 1.5 | 13.0 | 13.0 |

This screen provides the possibility to observe the washing process in detail and is, in case of errors, an ideal tool to seek out problems.

In the in the lower part of the screen, you have the possibility to preset, for each type of keg, the minimum time each medium needs to be active in the keg. The upper section displays the recorded actual time each medium was active in the keg. If the actual washing time is shorter than the specified time, it will light up in red and the keg will be rejected.

By pushing the reset button, the measured times will be reset to 0.

## 6.1.9. WASH TIMES

10/20/2014 — Wash times — 2:10:37 PM

| | Wash 1 (mixed water) | | Wash 2 (caustic) | | Wash 3 (mixed water) | | Wash 4 (acid) | | Wash 5 (hot water) | |
|---|---|---|---|---|---|---|---|---|---|---|
| | Actual | 30L | Actual | 30L | Actual | 30L | Actual | 30L | Actual | 30L |
| Time wash (s) | 7.000 | 7.000 | 16.000 | 16.000 | 3.000 | 3.000 | 16.000 | 16.000 | 16.000 | 16.000 |
| Maximum time purging wash (s) | 10.000 | 10.000 | 10.000 | 10.000 | 10.000 | 10.000 | 10.000 | 10.000 | 10.000 | 10.000 |
| | 1 | 2 | 1 | 2 | 1 | 2 | 1 | 2 | 1 | 2 |

Each keg type has its own washing-parameters (column 2). When choosing a keg type, these parameters are loaded into the working memory. To optimize these parameters, it is necessary to amend them in the working memory during production (column 1). If it turns out that the new parameters are an improvement, one can write them into the keg type-parameters (column 2). The next time this keg type is chosen, the adjusted parameters will be loaded.

## 6.1.10. CIP

Before starting/ after ending a production session, filling units are to be cleaned. This is done by switching into CIP-mode and is essential to prevent the production line to become contaminated.
By doing this, the whole track will be flushed with water, caustic (detergent) or acid.
One may not forget to put the CIP-cap in place on top of the filling head. A programmed leakage test at the beginning of the CIP-process will check this.
We are discussing an external CIP (all cleaning media is provided by an external process), a hot water CIP (hot water obtained from the supplier tank) or a detergent CIP (detergent obtained from the supply tank).

Monitor the CIP process on the filling head page.

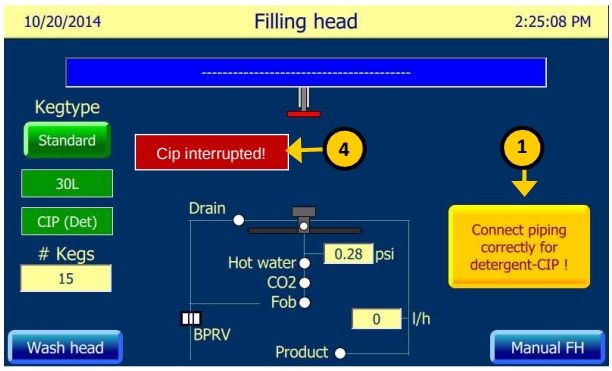


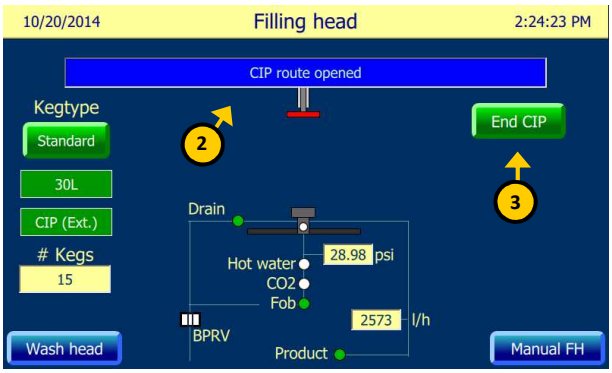


1 - Confirmation button to be pushed after correctly adjusting the pipes.

2 - This cell displays the active step in the process at any time. When any error occurs this cell colors red and displays the corresponding error message. When the filling head is ready to receive CIP-media, the message “CIP route open” appears.

3 - CIP process remains active until the operator presses the “End CIP” button. The head is cleaned and purged (insufflated) and the CIP process is finished successfully.

4 - When a CIP process was interrupted, the message “CIP aborted” is displayed and CIP must be reprocessed.

## 6.1.11. Error messages

### 6.1.12. Alarms

During production a whole range of errors can occur which blocks the production process. These machine stops are listed together with the corresponding alarms and messages to help restarting production swiftly.
On each screen, only the last error message appears on top of the screen. Obvious there are multiple errors possible at the same machine stop. All these are listed on the “Error” page.

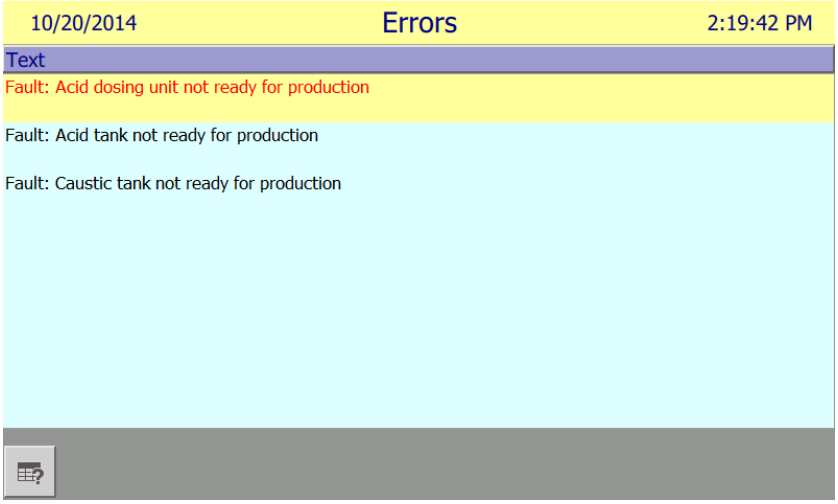


Tables on the next pages, list all alarms and messages with their possible cause and solution.

## 6.1.13. PROCESS RELATED FAULT / CAUSE / SOLUTION

| FAULTNR. | ERROR REPORT | INTERRUPTION | CAUSE | SOLUTION |
|---|---|---|---|---|
| 1 | Emergency stop | E.S. activated | | Danger for man and machine |
| 2 | Table not down (washing head) | Cylinder reached end position<br>No correct descending of table | | No keg on station<br>Reed switch defect<br>No air supply<br>I/P transmitter leaking or defect<br>Keg stuck |
| 3 | Head is leaking or keg is missing (washing head) | Link between spear and head not closed | | Seal on head defect<br>Keg seal defect<br>Centering not correct<br>No sterile air |
| 4 | Spear insertion failure (washing head) | Keg not opened by spear opener | | Protection cap on spear<br>Spear defect<br>Centering not correct<br>Reed switch defect or not correctly set<br>Spear opener jams/defect<br>No air supply |
| 5 | Spear insertion failure (filling head) | Keg not opened by spear opener | | Protection cap on spear<br>Spear defect<br>Centering not correct<br>Reed switch defect or not correctly set<br>Spear opener jams/defect<br>No air supply |
| 6 | Residual pressure check failure | Keg has no residual pressure | | Keg/seal defect<br>Residual pressure switch defect<br>Leak(s) between spear and pressure switch<br>New keg |
| 7 | Too much residual product in keg | Keg not empty | | Too much residual products in keg<br>Medium valves are not correctly switching<br>Wet-dry message failure<br>No air supply to blow out keg<br>Pressure air supply insufficient<br>Air regulator wrongly set<br>Pressure switch wrongly set<br>Air filter of sterile air dirty<br>Process valve (air) leaking |

| FAULTNR. | ERROR MESSAGE | INTERRUPTION | CAUSE | SOLUTION |
|---|---|---|---|---|
| 8 | Insufficient wash 1 in keg during purge | No or insufficient medium on station | | Medium not connected to machine<br>Medium pressure too low<br>Pressure regulator wrongly tuned or defect<br>Media pressure switch wrongly tuned or defect<br>I/P transmitter leaking or defect<br>Piping not correctly connected<br>Media valves leaking<br>PLC output defect |
| 9 | Keg not empty at wash 1 after air purge | No sterile air to blow out | | Air not connected to machine<br>Medium pressure too low<br>Cut off valve of sterile air not open<br>Pressure regulator wrongly tuned or defect<br>Media pressure switch wrongly tuned or defect<br>Filter of sterile air dirty<br>Media valve leaking |
| 10 | Insufficient wash 2 in keg during purge | No or insufficient medium on station | | Medium not connected to machine<br>Medium pressure too low<br>Pressure regulator wrongly tuned or defect<br>I/P transmitter leaking or defect<br>Piping not correctly connected<br>Media valves leaking<br>PLC output defect<br>Detergent pump defect |
| 11 | Keg not empty at wash 2 after air purge | No sterile air to blow out | | Air not connected to machine<br>Medium pressure too low<br>Cut off valve of sterile air not open<br>Pressure regulator wrongly tuned or defect<br>Medium pressure switch wrongly tuned or defect<br>Filter of sterile air dirty<br>Media valve defect |
| 12 | Insufficient wash 3 in keg during purge | No or insufficient medium on station | | Medium not connected to machine<br>Medium pressure too low<br>Pressure regulator wrongly tuned or defect<br>Medium pressure switch wrongly tuned or defect<br>I/P transmitter leaking or defect<br>Piping not correctly connected<br>Media valve leaking |

| | | | | |
|---|---|---|---|---|
| | | | | PLC output defect |
| **FAULTNR.** | **ERROR MESSAGE** | **INTERRUPTION** | **CAUSE** | **SOLUTION** |
| 13 | Keg not empty at wash 3 after air purge | No sterile air to blow out | | Air not connected to machine<br>Medium pressure too low<br>Cut off valve of sterile air not open<br>Pressure regulator wrongly tuned or defect<br>Medium pressure switch wrongly tuned or defect<br>Filter of sterile air dirty<br>Media valve leaking |
| 14A | Steam pressure failure [1] | Steam pressure insufficient | | Steam valve not open<br>No steam available |
| 14B | Steam pressure failure [2] | Steam pressure insufficient | | Steam valve not open<br>No steam available |
| 15 | Spear adaptor stuck in keg (washing head) | Keg is not closed | | Spear not closed<br>No air available<br>Spear opener stuck |
| 16 | Table not down (filling head) | Cylinder reached end position<br>Table not correctly lowered | | No keg on station<br>Reed switch defect<br>Control air missing<br>Table stuck |
| 17 | Head is leaking or keg is missing (filling head) | Link between spear and head leaking | | Head seal defect<br>Spear defect<br>Not correctly centered<br>Sterile air missing |
| 18 | Co2 pressure failure | Keg insufficiently pressurized | | CO2 pressure wrongly set<br>Pressure switch defect<br>CO2 not connected<br>CO2 filter dirty |
| 19 | Beer fill has taken too long | Keg cannot be filled up correctly | | Beer pressure too low<br>CO2 back pressure valve defect<br>Volumetric filling defect |
| 20 | Detergent tank temperature alarm | Temperature not reached | | Heating not switched on<br>No superheated steam<br>Heating defect<br>Working temperature not reached yet Valve does not close<br>Temperature controller does not work |
| 21 | Level too low | Level not reached | | No medium in tank |

| | | | | |
|---|---|---|---|---|
| | | Safety against dry-running of pump on | | Float-operated switch defect<br>Filling system defect |
| **FAULTNR.** | **ERROR MESSAGE** | **INTERRUPTION** | **CAUSE** | **SOLUTION** |
| 22 | Cip head leaking/Cap missing | CIP - cap not closed or missing in CIP process | | CIP - cap wrongly placed<br>Seal defect |
| 23 | Detergent tank fills too slow | Level not reached | | Medium missing in tank<br>Float - operated switch defect<br>Filling system defect |
| 24 | Detergent pump overloaded tripped | Pump error | | Dropout of pump<br>Overload protection |
| 25 | Keg is missing (filling head) | | | No keg placed on table |
| 26 | Keg missing (washing head) | | | No keg placed on table |
| 27 | Emergency stop reject (washing head) | E.S. activated while keg was processing | | E.S. activated |
| 28 | Manual reject (filling head) | | | Operator stopped process by means of pressing the stop button |
| 29 | Manual reject (washing head) | | | Operator stopped process by means of pressing the stop button |
| 30 | Spear adaptor stuck in keg (filling head) | Keg is not closed | | Spear not closed<br>No air available<br>Spear opener stuck |
| 31 | Cip stopped manually | CIP stopped by operator | | Manual intervention |
| 32 | Cip emergency stop reject | E.S. activated while keg was processing | | E.S. activated |
| 33 | Emergency stop reject (Filling head) | E.S. activated while keg was processing | | E.S. activated |

## 6.1.14. CONTROLS FAULT CODES / MESSAGES / SOLUTIONS

| Error code | PLC message. | Solution |
|---|---|---|
| 1 | Fault: Safety circuit not ok | Unlock emergency stop and recharge safety circuit by pressing reset. |
| 2 | Fault: Tanks not in automatic mode | Switch tanks in automatic mode for starting production or CIP process. |
| 3 | Fault: Caustic tank not ready for production | Wait until pre defined temperature and conductivity is reached, check tanks are in automatic mode, check if steam is available. |
| 4 | Fault: Acid tank not ready for production | |
| 5 | Fault: Hot water tank not ready for production | |
| 6 | Fault: Mixed tank not ready for production | |
| 7 | Fault: Caustic dosing unit not ready for production | Check that the suction rod is well placed in the barrel and whether there is sufficient level. Check wiring and connections. |
| 8 | Fault: Acid dosing unit not ready for production | |
| 9 | Fault: Spare | |
| 10 | Fault: Pressure transmitter washing head | Check transmitter, transmitter wiring, and analogue input card. |
| 11 | Fault: Pressure transmitter filling head | |
| 12 | Fault: Pressure transmitter caustic tank | |
| 13 | Fault: Pressure transmitter acid tank | |
| 14 | Fault: Pressure transmitter hot water tank | |
| 15 | Fault: Pressure transmitter mixed water tank | |
| 16 | Fault: Temperature transmitter washing head | Check transmitter, transmitter wiring, and analogue input card. |
| 17 | Fault: Temperature transmitter caustic tank | |
| 18 | Fault: Temperature transmitter acid tank | |
| 19 | Fault: Temperature transmitter hot water tank | |
| 32 | Fault: Temperature transmitter mixed water tank | |
| 33 | Fault: Conductivity transmitter caustic tank | Check transmitter, transmitter wiring, and analogue input card. |
| 34 | Fault: Conductivity transmitter acid tank | |
| 41 | Fault: Warning motorstarter caustic pump | When a motor has too much resistance, the motor will trip. Check for the cause that is jamming the movement and also if the break still works properly. |
| 42 | Fault: Error motorstarter caustic pump | |
| 43 | Fault: Reset motorstarter caustic pump | |
| 45 | Fault: Warning motorstarter acid pump | |
| 46 | Fault: Error motorstarter acid pump | |

| | | |
|---|---|---|
| 47 | Fault: Reset motorstarter acid pump | |
| 49 | Fault: Warning motorstarter hot water pump | |
| 50 | Fault: Error motorstarter hot water pump | |
| 51 | Fault: Reset motorstarter hot water pump | |
| 53 | Fault: Warning motorstarter mixed water pump | |
| 54 | Fault: Error motorstarter mixed water pump | |
| 55 | Fault: Reset motorstarter mixed water pump | |

# 7. MAINTENANCE INSTRUCTIONS

| Maintenance schedule | Compact 235 |
|---|---|

| | Daily / after production | Weekly | 1Y |
|---|---|---|---|
| CIP routine | | | |
| Deteregent Tank | | | |
| Air pressure regulator | | | |
| Media valves and supply | | | |
| Process heads | | | |

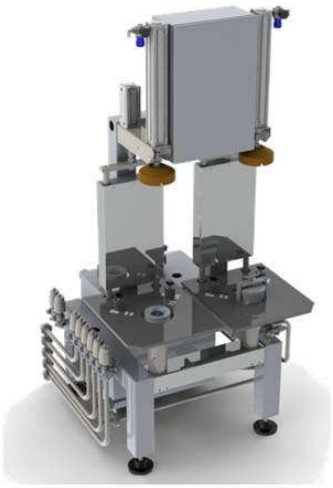

1

lambrechts
keeping your production in line

| Detergent tank | |
|---|---|
| **Activity** | **Frequency** |
| Before carrying out works, make sure the device is out of production and the emergency stop button is pressed.<br>Close off all media supplies | |
| **Cleaning the tank**<br><br>1. Open the man hole.<br>2. Open the drain valve.<br>3. Once the tank is drained , clean the level probe and temperature probe.<br>4. Check if the pump suction outlet is free.<br>5. Rinse the tank with fresh water.<br><br> 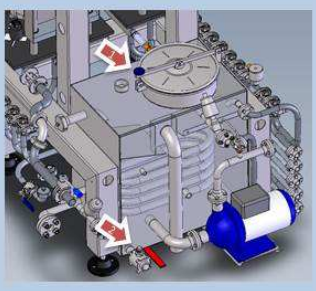  | Daily |

2

lambrechts
keeping your production in line

| Detergent tank | |
|---|---|
| **Activity** | **Frequency** |
| Before carrying out works, make sure the device is out of production and the emergency stop button is pressed.<br>Close off all media supplies | |
| **Filing up the tank**<br><br>1. Close the drain valve.<br>2. Fill up the tank with fresh water till overflow.<br>3. Add detergent concentrate.<br>4. Close the man hole.<br>5. Open media supply<br><br> 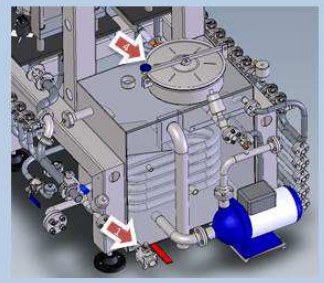 | Daily<br><br>  |

3

## Air pressure regulator

| Activity | Frequency |
|---|---|
| Before carrying out works, make sure the device is out of production and the emergency stop button is pressed | |
| **Check air filter and condensate**<br><br>1. Vent regulator and filter by adjusting the control button ( p = 0 bar).<br>2. Release the condensate by turning the drain counter clockwise.<br>3. After closing the drain, adjust the control button back to 6 bar.  | Weekly |
| **Exchanging filter element**<br><br>1. If there is hardly any flow at normal supply pressure, this may indicate that the filter element must be replaced.<br>2. Vent regulator and filter by adjusting the control button ( p = 0 bar).<br>3. Remove the filter housing and replace the element.<br>4. Re-assemble in reverse order and adjust the control button back to 6 bar. | |

4

## Process heads

| Activity | Frequency |
|---|---|
| **Pneumatic cylinders**<br><br>Check for air leaks (1)<br>Check for loose bolt or nuts (2) 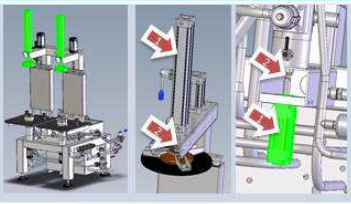 | Weekly |
| **Process heads**<br><br>Check the condition of the keg sealing rubber. (1)<br>Check if there any leaks on the body of the heads or near the inner leak witness channels (2)<br>Leaks could indicate that inner sealings are damaged and would call for premature Exchange. 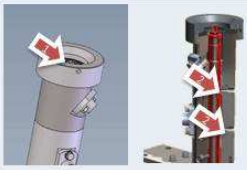 | Weekly |
| **Media supply**<br><br>Make sure there are no leaks are present on pipes, joints and fittings. | Weekly |
| Based on the results, supervison could revert to a premature maintenance intervention. | Weekly |

5

lambrechts
keeping your production in line

| Media valves and supply | Media valves |
|---|---|

| Activity | Frequency |
|---|---|
| Before commencing work, make sure that all media supply is closed and that the pipes are depressurized. | |
| **Exchanging PTFE seals on media valves**<br>1. Remove the valve by turning anti clockwise.<br>2. Unscrew the securing nut.<br>3. Replace the PTFE seal. (1)<br>4. Replace the PTFE seal. (2)<br>5. Re assemble in reverse order. 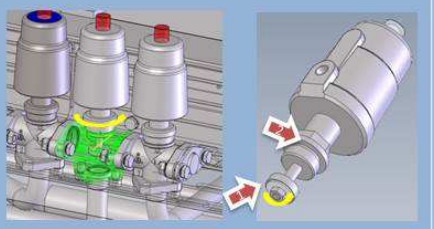 | Yearly |

6

lambrechts
keeping your production in line

| Media valves and supply | Media valves |
|---|---|

| Activity | Frequency |
|---|---|
| **Exchanging EPDM seals on collector bodies**<br>1. Remove hexagone bolts.<br>2. Relocate pipe.<br>3. Exchange EPDM seal. (1)<br>4. Re assemble in reverse order. 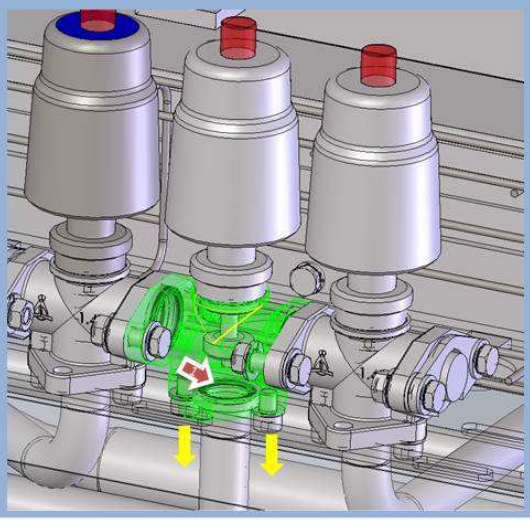 | Yearly |

7

lambrechts
keeping your production in line

| Media valves and supply | Media valves |
|---|---|

| Activity | Frequency |
|---|---|
| **Exchanging EPDM seals on collector bodies**<br><br>1. Remove hexagone bolts.<br>2. Relocate pipe.<br>3. Exchange EPDM seal. (1)<br>4. Remove teh colelctor assembly and seperate by removing the hexagonee bolts.<br>5. Exchange EPDM seal(2)<br>6. Re assemble in reverse order. | Yearly |

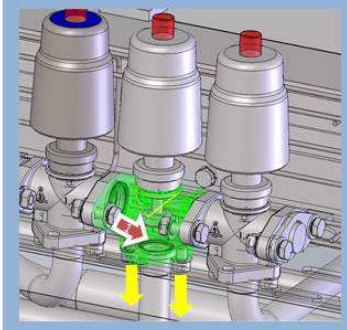

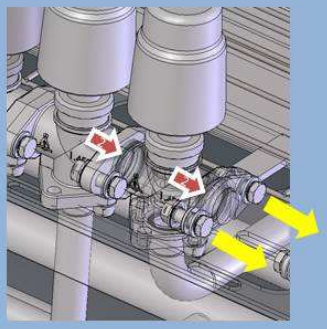

8

lambrechts
keeping your production in line

| Process heads | |
|---|---|

| Activity | Frequency |
|---|---|
| **Exchanging seals in the process heads> removing the heads from the machine**<br><br>1. Locate the processing head in the filler<br>2. Detach media connections<br>3. Remove o-ring seals, replace when during re-assembly after head rebuild<br>4. Detach the spear activating cylinder<br>• Remove 4 hexagon socket bolts (2)<br>• Slide cylinder away from head (3)<br>• Put cylinder aside<br>5. Remove 4 hexagon bolts and take head out of filler (4) | Yearly |

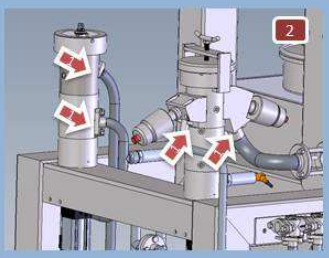


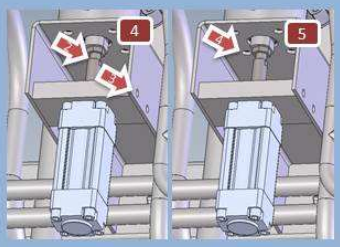


9

lambrechts
keeping your production in line

| Process heads | Filling head |
|---|---|

| Activity | Frequency |
|---|---|
| **Exchange of seals in valves on filling head**<br><br>1. Unscrew valves from body<br>2. Unscrew securing nut and exchange teflon seat on DN15 return flow valve<br>3. Unscrew securing nut and exchange teflon seat on double beer valve | Yearly |

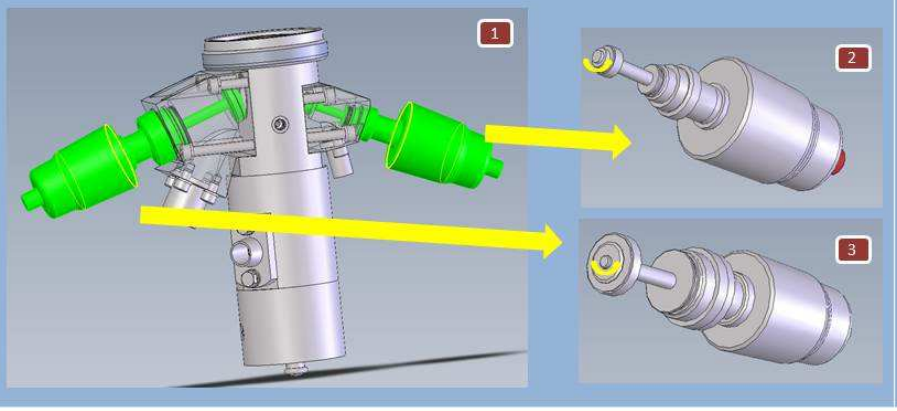


10

lambrechts
keeping your production in line

| Process heads | Filling head |
|---|---|

| Activity | Frequency |
|---|---|
| **Exchange of seals in connections to filling head**<br><br>1. Unscrew hexagon socket bolts<br>2. Remove o-ring seal, replace when during re-assembly after head rebuild<br>3. Remove valve housing, remove o-ring seal, replace when during re-assembly after head rebuild<br>4. Unscrew hexagon bolts and remove o-ring seal, replace when during re-assembly after head rebuild | Every year |

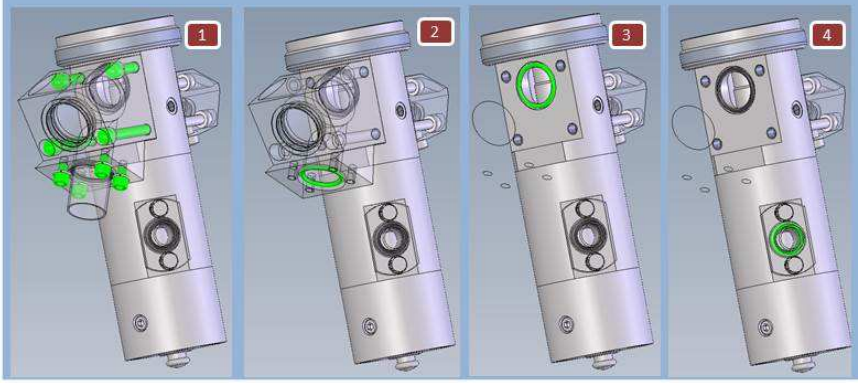


11

lambrechts
keeping your production in line

| Process heads | Heads disassembly |
|---|---|

| Activity | Frequency |
|---|---|
| **Exchange of seals in processing heads (filling and washing )**<br><br>1. Unscrew centering cone<br>2. Remove spear seal<br>3. Unscrew process shaft securing bolt<br>4. Remove process shaft | Yearly |

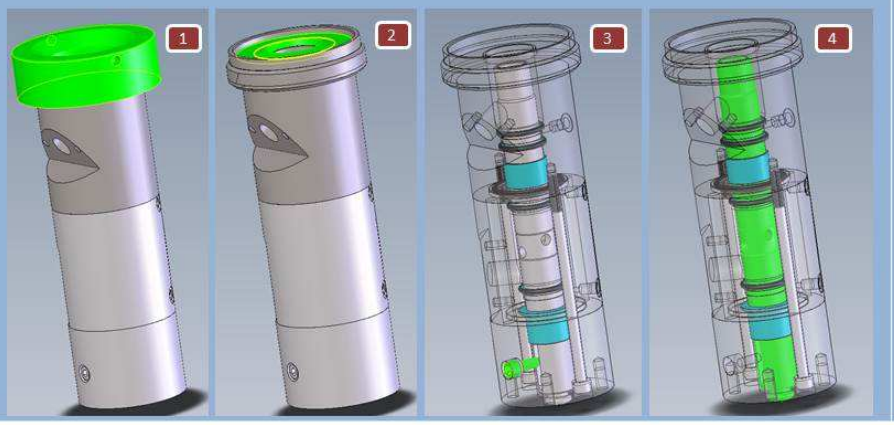


12

lambrechts
keeping your production in line

| Process heads | Heads disassembly |
|---|---|

| Activity | Frequency |
|---|---|
| **Exchange of seals in processing heads**<br><br>1. Unscrew hexagon socket bolts<br>2. Split body in upper middle and lower part<br>3. Exchange glyd support ring and seal combo's<br>4. Exchange guide sleeves | Yearly |

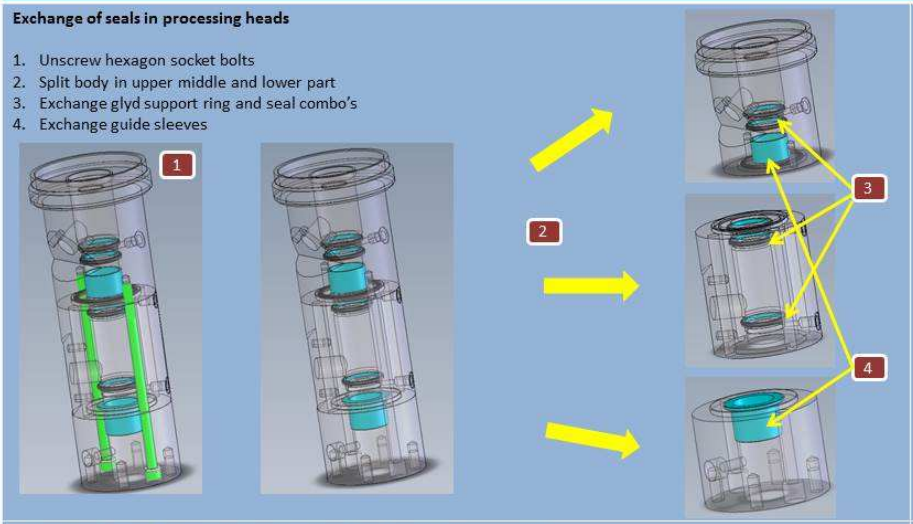


**Assembleer de vulkop in omgekeerde volgorde en hermonteer in toestel**

13

# 8. P&ID – FLOW DIAGRAM

# 9. ELECTRICAL & PNEUMATIC DRAWINGS

# 10. MECHANICAL DRAWINGS

# 11. ADDED DOCUMENTATION